PUBLIC HEARING TO CONSIDER THE PROPOSED CLOSURE OF JOSEPH STOCKTON ELEMENTARY SCHOOL

APRIL 16, 2013
COMMENCING AT 8:00 P.M.

HON. CHARLES WINKLER
HEARING OFFICER

TABLE OF CONTENTS

A. NOTICES OF HEARING

1. Notice Letter to Parents or Guardians of Students at Joseph Stockton Elementary School and Mary E. Courtenay Elementary Language Arts Center dated March 21, 2013 and Draft Transition Plan for the Proposed Closure of Joseph Stockton Elementary School and Relocation of Mary E. Courtenay Elementary Language Arts Center

2. Notice Letter to School Administrators, Faculty, Staff, and Local School Council Members at Joseph Stockton Elementary School and Mary E. Courtenay Elementary Language Arts Center dated March 21, 2013 and Draft Transition Plan for the Proposed Closure of Joseph Stockton Elementary School and Relocation of Mary E. Courtenay Elementary Language Arts Center

3. Affidavit of Jeff Broom, Performance Data Analyst for Chicago Public Schools Regarding Mail and/or Personal Delivery of Notice Letters to Parents/Guardians, School Personnel and Local School Council Members of Joseph Stockton Elementary School and Mary E. Courtenay Elementary Language Arts Center on or about March 21, 2013

4. Affidavit of Leonard Langston, Chief of Staff, Office of Public and Community Affairs for Chicago Public Schools Regarding Electronic Mail Delivery of Notice Letters to Elected Officials on or about March 21, 2013

5. Affidavit of Jason Van Patten, Director of Web Services for Chicago Public Schools Regarding Publication of: (a) Draft Guidelines for School Actions on or about October 31, 2012, (b) Guidelines for School Actions on or about November 30, 2012, (c) Proposals on or about March 21, 2013, and (d) Summaries from Community Meetings on or about April 13, 2013 and April 16, 2013

6. Public Notice of Hearing and Community Meeting by Newspaper Publication in the Chicago Sun-Times beginning April 3, 2013

B. RELEVANT LEGAL AND PROCEDURAL DOCUMENTS

7. 105 ILCS 5/34-18 ("Powers of the Board"), effective July 13, 2012

8. 105 ILCS 5/34-200 ("Definitions"), effective July 13, 2012

9. 105 ILCS 5/34-225 ("School Transition Plans"), effective November 30, 2012

10. 105 ILCS 5/34-230 ("School Action Public Meetings and Hearings"), effective August 22, 2011

11. 105 ILCS 5/34-232 ("Proposed School Action Announcement and Notice; 2012-2013 School Year"), effective November 30, 2012

12. Chicago Board of Education School Performance, Remediation, and Probation Policy for the 2011-2012 School Year (Policy Manual Section 302.6A, Board Report 10-0728-PO4)

13. Chicago Board of Education Policy on Review and Establishment of School Attendance Boundaries (Policy Manual Section 703.2, Board Report 05-0622-PO1)

14. Chicago Public Schools Space Utilization Standards (Issued December 28, 2011)

15. Guidelines for School Actions, 2012-2013 School Year (Issued November 30, 2012)

16. Chief Executive Officer's Procedures for Public Hearings on Proposed School Closure, Consolidation, Phase-Out, or Reassignment Boundary Change

C. DOCUMENTS AND WRITTEN EVIDENCE IN SUPPORT OF THE PROPOSAL

17. Transcript of the April 8th Community Meeting regarding the Proposed Closure of Joseph Stockton Elementary School and Relocation of Mary E. Courtenay Elementary Language Arts Center

18. Summary of the April 8th Community Meeting regarding the Proposed Closure of Joseph Stockton Elementary School and Relocation of Mary E. Courtenay Elementary Language Arts Center

19. Transcript of the April 11th Community Meeting regarding the Proposed Closure of Joseph Stockton Elementary School and Relocation of Mary E. Courtenay Elementary Language Arts Center

20. Summary of the April 11th Community Meeting regarding the Proposed Closure of Joseph Stockton Elementary School and Relocation of Mary E. Courtenay Elementary Language Arts Center

21. Written Statement of Benjamin Felton, Portfolio Planner for the Chicago Public Schools

22. Presentation Accompanying Benjamin Felton's Written Statement

23. Map of Proposed Attendance Area Boundary Change

24. Written Statement of Craig Benes, Chief of Schools of the Ravenswood-Ridge Elementary Network for the Chicago Public Schools

25. Joseph Stockton Elementary School and Mary E. Courtenay Elementary Language Arts Center Performance Policy Reports

CHICAGO PUBLIC SCHOOLS CPS

125 S. Clark Street • Chicago, Illinois 60603 • Phone: (773) 553-1500 • Fax School: (773) 553-1501

Barbara Byrd-Bennett
Chief Executive Officer

DATE: March 21, 2013

Parent or Guardian of a Student at
Joseph Stockton Elementary School
4420 N. Beacon St.

Parent or Guardian of a Student at
Mary E Courtenay Elementary Language Arts Center
1726 W. Berteau Ave.

Re: **Proposed Closure of Joseph Stockton Elementary School and Relocation of Mary E. Courtenay Elementary Language Arts Center**

Dear Parent or Guardian:

As Chief Executive Officer of the Chicago Public Schools (CPS), I am committed to ensuring that every child in every neighborhood receives a high-quality education that prepares them to succeed in college, career, and life.

Right now, the reality is that too many of our children are not receiving the education they deserve. We have a school utilization crisis that is spreading our limited resources too thin. We are funding half-empty buildings that are costly to maintain and repair instead of using those funds to directly invest in our children's education. This crisis did not happen overnight, and we will not fix everything overnight either, but our children need and deserve for all of us to work each and every day to improve their chances to succeed.

From investments in early childhood education and a full school day to ensuring there are strong principals and teachers in our schools, we are working each and every day towards achieving that goal and doing everything we can to make sure Chicago's children will thrive and succeed.

We must make certain that every child can attend a school that has the supports and resources needed to help every student flourish. Combining schools will allow us to use more resources to ensure that every student attends a higher performing, 21st century school with updated amenities, more individual instruction, and the programs they need to compete and succeed. I have made the commitment that every student and parent will have an option to attend a higher performing school in the fall and that is a commitment you can be sure I will keep.

Make no mistake, this will be hard. As a former teacher and a principal, I've lived through school closings. They are never easy, no matter where you are. But in my 40 years as an educator, I have never felt more certain that we need to take action now. If we do not take action, our children and their futures will pay the price for our delay.

I want to assure you that I have heard your concerns and I have taken them to head and heart: I will never seek to improve education at the expense of our students' safety. As we work to improve our children's quality of education, we will also work to ensure they are supported and safe by coordinating and collaborating with city agencies such as the Chicago Police Department and the Department of Family and Support Services, as well as community and faith-based organizations.

After a thoughtful, rigorous process in which we looked at every individual school and incorporated the feedback we received from more than 20,000 of you – parents across the city and community members in every neighborhood – we are making multiple proposals today. I am making a recommendation to close Joseph Stockton Elementary School (Stockton). I am also recommending that Mary E. Courtenay Elementary Language Arts Center (Courtenay) serve as the dedicated welcoming school for students at Stockton in the fall and that Courtenay relocate to the current Stockton facility, located at 4420 N. Beacon St.

There are a series of supports that we will provide in order for your child to have a safe and seamless transition to a higher performing academic environment at their welcoming school. These include:

- Access to a dedicated, higher performing welcoming school with additional capital investments and further supported by new resources to safely and seamlessly transition students in fall 2013;
- A safety plan for all students and staff at all welcoming schools created in coordination with the Chicago Police Department and other community-based organizations;
- Social and emotional supports based on the specific needs of students;
- Supports for students with diverse learning needs;
- Supports for students in temporary living situations;
- Supports for English language learners;
- Facility improvements will be made to enhance the overall learning environment of the new school. Improvements may include items such as upgrades to playgrounds, science and computer labs, air conditioning, and others.

Lastly, principals at all welcoming schools will also receive additional discretionary funding that they can use to support the unique needs of all students at those schools.

A detailed proposal is outlined below. Please read it and carefully consider the supports we are offering to help your child receive a higher quality education at their dedicated welcoming school. And please know that our work is still not complete and your continued input will be critical in the weeks ahead. I encourage you to participate in the two community meetings and one public hearing for your school noted in the proposal below. I thank you for your continued feedback as we work to provide your child and all CPS students with the high-quality education they deserve.

Our Proposal and Investments

Our proposal is to close Stockton, located at 4420 N. Beacon St. at the end of the current school year because it is underutilized, based on CPS Space Utilization Standards and student enrollment numbers recorded on the 20th attendance day for the 2012-2013 school year. Specifically, Stockton had 475 students enrolled on the 20th day of attendance, but has the capacity to serve 1050 students. Stockton students will be welcomed by Courtenay, and Courtenay will be relocated from its present location to 4420 N. Beacon St. Thus, all Stockton students will continue to attend school at 4420 N. Beacon St., welcomed by the Courtenay administration, staff, and students. While the closure of Stockton is not related to performance, it is important to note that Courtenay is a higher performing school, according to the Chief Executive Officer's Guidelines for School Actions (Guidelines).

A draft transition plan has been sent home from school with students, which outlines investments that will support a smooth and safe transition for all students.

Furthermore, CPS is committed to providing educational opportunities that fit each student's unique learning needs and each family's priorities, and encourages families to decide if this welcoming school is the best fit for

their child. To support families in this decision, information from the Office of Access & Enrollment is available in the draft transition plan.

Attendance Area Boundary of Stockton
I am also proposing that the geographic boundary currently associated with Stockton will be reassigned to Courtenay, currently located at 1726 W. Berteau Ave. but proposed to be located at 4420 N. Beacon St. This means that Courtenay will be the new neighborhood school for students living in the Stockton boundary.

Public Comment on this Proposal
Public comment can be made during the following two community meetings and one public hearing:

Community Meeting 1	Community Meeting 2	Public Hearing
Monday, April 08, 2013	Thursday, April 11, 2013	Tuesday, April 16, 2013
7:30pm-9:30pm	7:30pm-9:30pm	8:00pm-10:00pm
Amundsen High School	Amundsen High School	CPS Central Office
5110 North Damen Avenue	5110 North Damen Avenue	125 S. Clark St.

I invite you to share your feedback on this proposal at the scheduled community meetings and public hearing. If you wish to comment at the community meetings or hearing, you must sign up to speak on the day of, at the designated location, beginning one hour before the designated start time and ending one hour after the start of the meeting or hearing. You will have two minutes to speak, unless the hearing officer or meeting organizer provides an extension. The hearing will conclude at the stated end time or following the comments of the last person who has signed up to speak, whichever occurs first.

After the community meetings and public hearing, I will review a written report from the hearing officer. At that time, I may recommend that the Board of Education of the City of Chicago consider and approve the closure of Stockton.

Further Questions and Concerns:
If you have any questions or concerns, please feel free to call 311 (City Services) or visit www.cps.edu/qualityschools.

Thank you for your consideration and patience during this time as we work to provide your children with all the resources and supports they deserve.

Sincerely,

Barbara Byrd-Bennett
CEO, Chicago Public Schools

CHICAGO PUBLIC SCHOOLS CPS

125 S. Clark Street • Chicago, Illinois 60603 • Phone: (773) 553-1500 • Fax School: (773) 553-1501

Barbara Byrd-Bennett
Chief Executive Officer

21 de marzo de 2013

Padre o tutor de estudiante de
Stockton Elementary School
4420 N Beacon St

Padre o tutor de estudiante de
Mary E Courtenay Elementary Language Arts Center
1726 W Berteau Ave

Re: **Propuesta de cierre de Joseph Stockton Elementary School y Reubicación de** Mary E Courtenay Elementary Language Arts Center

Estimado padre o tutor:

Como Directora Ejecutiva de las Escuelas Públicas de Chicago (CPS), estoy comprometida en asegurar que cada niño, en cada barrio, reciba una educación de calidad que lo prepare para el éxito en la universidad, en una carrera y en la vida.

En estos momentos, la realidad indica que demasiados niños no reciben la educación que merecen. Tenemos una crisis de uso del espacio escolar que está agotando nuestros recursos limitados. Estamos pagando por edificios semivacíos que son costosos de mantener y reparar, en lugar de usar esos fondos para invertir directamente en la educación de nuestros niños. Esta crisis no ocurrió de repente, y tampoco vamos a poder solucionarla de un momento a otro, pero nuestros niños necesitan y merecen que todos nosotros trabajemos todos los días para mejorar sus posibilidades de éxito.

Desde inversiones en educación inicial y el día escolar completo, a la presencia de directores y maestros sólidos en nuestras escuelas, trabajamos todos los días para alcanzar esa meta y hacer todo lo posible para que los niños de Chicago mejoren y sean exitosos.

Tenemos que asegurarnos que cada niño pueda asistir a una escuela que cuente con los apoyos y recursos necesarios para ayudarlo a prosperar. La combinación de escuelas nos permitirá contar con más recursos para que cada estudiante asista a una escuela de mejor rendimiento, una escuela del siglo 21 con amenidades actualizadas, más instrucción individual y los programas que necesiten para competir y triunfar. Me he comprometido a que cada estudiante y padre tengan una opción de asistir a una escuela de mejor rendimiento en el otoño, y este es un compromiso que pueden estar seguros voy a mantener.

No se engañen, esto será duro. Como ex maestra y directora he vivido el cierre de escuelas. Nunca es fácil, sin importar donde se encuentre uno. Pero en mis 40 años de educadora nunca estuve más convencida de que tenemos que tomar medidas ahora. Si no lo hacemos, nuestros niños y sus futuros pagarán el precio de la demora.

Quiero asegurarles que escuché sus preocupaciones y las tuve en cuenta: nunca voy a tratar de mejorar la educación a expensas de la seguridad de nuestros estudiantes. Mientras trabajamos para mejorar la calidad de la educación de nuestros hijos, también trabajaremos para estar seguros de que estén apoyados y seguros, coordinando con agencias municipales como el Departamento de Policía de Chicago y el Departamento de

Familia y Servicios de Apoyo, así como con organizaciones comunitarias y religiosas.

Después de un proceso meditado y riguroso, en el que consideramos cada escuela individual e incorporamos los aportes recibidos de más de 20,000 personas como usted – padres de toda la ciudad y miembros de comunidades de cada barrio – estoy haciendo hoy múltiples propuestas. Estoy recomendando el cierre de Joseph Stockton Elementary School (Stockton). Asimismo recomiendo que Mary E Courtenay Elementary Language Arts Center (Courtenay) sirva como escuela receptora de los estudiantes de Stockton en el otoño, y que Courtenay sea reubicada en el edificio de Stockton en 4420 N Beacon St.

Hay una serie de apoyos que ofreceremos para que su hijo tenga una transición segura y sin problemas a un ambiente académico de mejor rendimiento en su escuela receptora. Ellos incluyen:

- Acceso a una escuela dedicada, de mejor rendimiento y con capital de inversión adicional, apoyada además por nuevos recursos para que haya una transición segura y sin problemas en el otoño de 2013;
- Un plan de seguridad para todos los estudiantes y el personal en todas las escuelas receptoras, creado en coordinación con el Departamento de Policía de Chicago y otras organizaciones comunitarias;
- Apoyo social y emocional basado en las necesidades específicas de los estudiantes;
- Apoyo a los estudiantes con diversas necesidades de aprendizaje;
- Apoyo a los estudiantes en situación de vivienda temporaria;
- Apoyo a los estudiantes que están aprendiendo inglés; y
- Actualización de instalaciones para mejorar el ambiente educativo general de la nueva escuela. Las mejoras pueden incluir los patios de juego, laboratorios de ciencias e informáticos, aire acondicionado y otras.

Finalmente, los directores de todas las escuelas receptoras también dispondrán de fondos discrecionales adicionales que usarán en el apoyo de las necesidades únicas de todos los alumnos.

Una propuesta detallada se encuentra a continuación. Por favor, lean y consideren cuidadosamente los apoyos que estamos ofreciendo para ayudar a su niño a recibir una educación de calidad en su nueva escuela. Y por favor, sepan que nuestro trabajo no está completo y sus aportes serán críticos en las semanas venideras. Les pido que participen en las dos reuniones comunitarias, y en la audiencia pública, que se realizarán para su escuela. Les agradezco sus aportes continuados mientras trabajamos para ofrecer a su hijo y a todos los estudiantes de CPS la educación de calidad que merecen.

Nuestra propuesta e inversiones

Nuestra propuesta es cerrar la escuela Stockton, ubicada en 4420 N Beacon St, al final del actual año lectivo porque está subutilizada, con base en los Estándares de Uso del Espacio de CPS y en la cantidad de estudiantes matriculados en el 20° día de asistencia del año escolar 2012-2013. Específicamente, Stockton tenía 475 estudiantes matriculados en el 20° día de asistencia, pero una capacidad para servir a 1050 estudiantes. Los estudiantes de Stockton serán bienvenidos en Courtenay, y Courtenay pasará de su ubicación actual al 4420 N Beacon St. Por lo tanto, todos los estudiantes de Stockton continuarán reportándose en 4420 N Beacon St, bienvenidos por la administración, personal y alumnos de Courtenay. Aunque el cierre de Stockton no se debe a su rendimiento, es importante notar que Courtenay es una escuela de mejor rendimiento, según los Lineamientos de Acciones Escolares de la Directora Ejecutiva (Lineamientos).

Un borrador del plan de transición ha sido entregado por la escuela a los estudiantes para que lo lleven a sus casas, con las inversiones que apoyarán una transición sin problemas y segura.

Más aun, CPS se compromete a ofrecer oportunidades educativas que atiendan las necesidades únicas de cada estudiante y las prioridades familiares, y alienta a las familias a decidir si la escuela receptora asignada es la mejor para sus hijos. Para apoyar a las familias en esta decisión, la información sobre la Oficina de Acceso y Matriculación se encuentra en el borrador del plan de transición.

Área de asistencia de Stockton
También estoy proponiendo que el área geográfica asociada actualmente con Stockton sea reasignada a Courtenay, ubicada actualmente en 1726 W. Berteau Ave. con una propuesta para que sea instalada en 4420 N. Beacon St. Esto significa que Courtenay será la nueva escuela comunitaria de los estudiantes que vivan en el área de Stockton.

Comentarios del público sobre esta propuesta
El público podrá hacer comentarios durante las siguientes reuniones comunitarias, y en la audiencia pública:

Reunión comunitaria 1	Reunión comunitaria 2	Audiencia pública
Monday, April 08, 2013	Thursday, April 11, 2013	Tuesday, April 16, 2013
7:30pm-9:30pm	7:30pm-9:30pm	8:00pm-10:00pm
Amundsen High School	Amundsen High School	CPS Central Office
5110 North Damen Avenue	5110 North Damen Avenue	125 S. Clark St.

Los invito a compartir sus opiniones sobre esta propuesta en las reuniones comunitarias y en la audiencia pública. Si quieren participar tendrán que registrarse ese día en el lugar designado, a partir de una hora antes del comienzo y hasta una hora después de iniciada la reunión o audiencia. Dispondrán de dos minutos para hablar, a menos que el oficial a cargo de la audiencia o el organizador de la reunión otorguen una extensión. La audiencia concluirá a la hora señalada o después de los comentarios de la persona que hable por último, lo que ocurra primero.

Después de las reuniones comunitarias y de la audiencia pública voy a analizar el informe escrito del oficial encargado. En ese momento podré recomendar que la Junta de Educación de la ciudad de Chicago considere y apruebe la clausura de Stockton.

Más preguntas o preocupaciones:
Si tienen alguna pregunta o preocupación, por favor llamen al 311 (Servicios de la Ciudad) o visiten www.cps.edu/qualityschools.

Gracias por su consideración y paciencia durante este tiempo mientras trabajamos para ofrecer a sus hijos todos los recursos y apoyos que merecen.

Atentamente,

Barbara Byrd-Bennett
Directora Ejecutiva, Escuelas Públicas de Chicago

CHICAGO PUBLIC SCHOOLS | CPS

DRAFT TRANSITION PLAN

For the Proposed Closure of Joseph Stockton Elementary School

I. Introduction

Chicago Public Schools (CPS) is committed to ensuring that every student, in every community, has access to a high-quality, well-rounded education in order to graduate from high school ready to succeed in college, career, and life. From investments in early childhood education and a full school day to ensuring that there are effective principals and teachers in our schools, CPS is doing everything possible to provide Chicago's children with a 21st century education that helps them thrive and succeed. It is our obligation to work every day on behalf of our children's future.

However, our District faces a $1 billion deficit, which threatens everything in our system by making it difficult to provide the robust supports and services that all children deserve. Our District's financial crisis is significantly challenged by underutilization, resulting in financial resources being invested in half-empty buildings that are costly to maintain and repair. Currently, CPS is financing schools and buildings with a capacity for 511,000 students while only serving 403,000 students. This utilization crisis is spreading our already scarce financial resources much too thin.

To address this crisis, CPS is proposing a plan to address underutilization based on significant input from partners including parents, students, teachers, principals, community and faith leaders, the independent Commission on School Utilization, the Chicago Police Department, and the Department of Family and Support Services. Through these collaborative efforts, CPS' plan represents a new day for Chicago Public Schools, and a fresh start for our students in Fall 2013.

The plan proposes to close schools that are underutilized. These actions will enable CPS to maximize resources by supporting a reduced number of school buildings, which will improve our capacity to provide all children with greater access to critical resources and supports such as libraries, technology, playgrounds, nurses, and counselors.

In order to ensure a quality education for students, CPS proposes to close Joseph Stockton Elementary School (Stockton). This decision is based on the underutilization of Stockton, in accordance with the Chief Executive Officer's Guidelines for School Actions (Guidelines). This action, if approved, will welcome returning students at Mary E. Courtenay Elementary Language Arts Center (Courtenay), which will be re-located.

The transition plan outlined below summarizes the proposal, identifies the supports that will be provided to impacted students to create a smooth and safe transition process, and notes opportunities for commenting on the action.

II. Summary of Action

Stockton is a neighborhood elementary school located at 4420 N. Beacon St., in the Ravenswood-Ridge Elementary Network of CPS. Stockton currently serves 475 students in PK & K-8th grades. CPS is proposing to close Stockton based on the school's underutilization. The closure meets the criteria of the Guidelines.

As a result of this action, all returning Stockton students will be welcomed by Courtenay. Courtenay will be re-located from its present location to the current Stockton facility, located at 4420 N. Beacon St. Thus, all Stockton students will continue to attend school at 4420 N. Beacon St., welcomed by the Courtenay administration, staff, and students. Families are also encouraged to pursue other educational options at CPS that best meet their student's learning needs and family priorities. Information about educational options is provided in detail in a subsequent section of this transition plan. The proposed investments CPS will make for transitioning students at both Stockton and Courtenay, as described in this transition plan, will provide students with a supportive learning environment and ease the transition process as much as possible.

The geographic boundary currently associated with Stockton will be reassigned to Courtenay, currently located at 1726 W. Berteau Ave. but proposed to be located at 4420 N. Beacon St. This means that Courtenay will be the new neighborhood school for students living in the Stockton boundary.

III. Safety and Security

CPS has engaged multiple experts regarding school safety to make decisions that will ensure children have a seamless transition next year at all welcoming schools. The Office of Safety and Security (OSS), Chicago Police Department, the Department of Family and Support Services, and community and faith partners were all consulted as part of the safety planning process.

CPS has prepared a plan for the safety of students and staff affected by the proposed closure of Stockton and the re-location of Courtenay to 4420 N. Beacon St. OSS will continue to partner on an on-going basis with local community groups, elected officials, sister agencies, and the Chicago Police Department to maintain a smooth and safe transition of students to a new school environment. As part of the transition process, OSS will:

- Review and update school safety audits
- Review security personnel allocations to ensure proper coverage
- Review school safety technology and enhance systems as appropriate
- Address any safety concerns raised by students and staff
- Provide Safe Passage: CPS will invest in additional Safe Passage supports to address the safety of all students and staff traveling to and from school. Safe Passage workers wear identifiable vests and stand on designated street corners to monitor students' safety during their travel to school in the morning and home in the afternoon. Prior to the start of the 2013-2014 school year, OSS will work with the Courtenay administration and the community to designate specific intersections for safe passage supports
- As deemed necessary by OSS, in collaboration with the community, CPS will also provide a transition security officer to assist with safety and security needs.

IV. Supports for Students and Schools

CPS is committed to ensuring a productive and supportive remainder of the 2012-2013 school year at Stockton and Courtenay and ensuring a successful transition for the 2013-2014 school year. To accomplish this, CPS will provide the following supports to meet the academic, social and emotional, and specific learning needs of transitioning students. These resources may be further customized as feedback is obtained at community meetings and a public hearing regarding this action. Additionally, resources may be adjusted to meet the unique needs of the transitioning school population if deemed necessary by the Chief of Schools overseeing this Network.

Academic Needs of Students

If this proposal is approved, Stockton will be welcomed by Courtenay, which is a higher performing school. To ensure Stockton students receive high-quality academic instruction throughout the transition, Stockton and Courtenay will receive:

- Principal Transition Coordinator (PTC): PTCs are former principals, or other administrators with significant experience, who will be a resource to help the principal of Stockton maintain academic rigor in the classroom and ensure a smooth transition to Courtenay. The PTC will ensure continuity of support for faculty and students in the 2013-2014.
- Data Support: Preparation and planning are key to ensuring the right supports are in place and ready for the beginning of the school year. To help facilitate a smooth transition for all students, CPS will provide Courtenay with comprehensive data on all transitioning students. Student-specific data such as test scores, attendance, and grades will enable all school staff to proactively identify and prepare to meet the needs of every student.

- Network Chief Office Hours: Network Chiefs, who oversee a geographic network of schools, will set aside dedicated time to discuss concerns and educational options with families and students affected by this action. For specific dates and times, please contact your school or Network office.

Additionally, Stockton and Courtenay will receive discretionary resources to provide direct academic support to students. Principals, with local community input, will decide how best to utilize these resources. Selections will be approved by the Network Chief. Options for use include, but are not limited to:

- Instructional Coach or Teacher Leader: An instructional coach or teacher leader will ensure instruction quality remains high as students transition so that they do not lose any momentum.
- Academic tutoring resources: Resources for an academic tutoring position or program in reading and math may be provided.

Social Emotional Needs of Students

CPS understands that whenever students transition to a new school, additional support is needed to help them adjust. CPS will provide resources and work with schools to design a school-specific program of support which may include items such as:

- Intervention groups or peace circles aimed at helping students work through concerns associated with the transition as needed.
- Implementing restorative practices (such as peer circles and peer juries) to encourage peer-to-peer problem solving and resolution.
- Access to highly structured interventions for smaller groups of students in need of more individualized attention.
- Student Leadership and Culture-Building Activities: To foster an environment that is both supportive and inclusive for all students, CPS will provide resources to school leadership to help create positive relationships among students and implement culture-building activities (such as staff luncheons and team- and trust-building activities).

Additionally, CPS believes cultural integration of the two school communities is important for a successful, smooth transition. To support this, CPS will provide resources for "Fresh Start" Activities. Courtenay will be provided discretionary resources to implement "get to know your new school" activities, such as visits for families, coffee chats with the welcoming principal, picnics, field trips, and parent meetings.

Support for Specific Students Needs

To ensure students at Stockton who have unique needs or circumstances are adequately supported in this transition, CPS will provide the Network with additional resources to work directly with families and assist in explaining their school options. Additionally, CPS will provide the following:

Students with Diverse Learning Needs

- Students with disabilities at Stockton will continue to be provided instructional support both in the general education classroom and in small group or individual settings, in accordance with their Individualized Education Programs (IEPs) for the 2012-2013 school year.
- Once students transition to Courtenay, all instructional, clinical and related services will be provided in accordance with their IEPs. All specialized services, including nursing, speech, occupational therapy, physical therapy, social work, psychology, assistive technology support, and special education instruction will continue to be provided in the manner stated on each student's current IEP.
- CPS will work with Courtenay to ensure classrooms are set up to meet student needs, to schedule all students in accordance with IEPs, and ensure there is adequate staff to fully implement student IEPs.
- In addition, to ensure IEP implementation, CPS will review all IEPs with the staff at Courtenay, provide observations of classrooms when school has resumed, and train Courtenay staff on specialized equipment for specific student needs.

- CPS will also provide disability awareness training to staff at Courtney targeting training based on the unique population of the students in the school.
- The facility at 4420 N. Beacon St. is not accessible to persons with disabilities according to the Americans with Disabilities Act. For more information about a particular school, contact the CPS Director of ADA Policy at (773) 553-2158.

Students in Temporary Living Situations

- The CPS Office of Students in Temporary Living Situations (OSTLS) will continue the supports currently provided to Students in Temporary Living Situations (STLS) as required by law and as they transition to a new school. These include free school meals, enrollment support, provision of required school uniforms and school supplies as needed, transportation assistance when eligible, and waiver of all school related fees.
- Students in Temporary Living Situations will be encouraged to attend cultural integration and welcoming events to introduce them to their new school, teachers, and administrators, as described above.
- STLS students affected by this action may choose to attend Courtenay or meet with OSTLS staff to identify enrollment options available. For families currently enrolled in the STLS program, younger siblings may attend the same school that their older sibling elects under this proposed action.
- Additionally, CPS will provide professional development and support to Courtenay staff on providing transition services for STLS students.

English Language Learners (ELL)

- Current and future ELLs attending Courtenay will receive state mandated transitional bilingual program services which include, depending on the number of ELLs enrolled, certified Bilingual and English as a Second Language (ESL) teachers and/or support from the Department of Language and Cultural Education (DoLCE).
- In addition, CPS will assist Courtenay in serving students based on their language and learning needs.
- Schools that welcome newcomers to the United States will be provided student orientation kits and will receive assistance from CPS to coordinate with resettlement centers, translation/interpretation services, tutoring services in the native language, and social-emotional supports tailored to their specific needs.

Early Childhood Participants

- Students and families currently enrolled in CPS early childhood programs affected by school actions will be offered support for placement in the designated welcoming school when possible. In cases where this is not possible, efforts will be made to support families in placement through "Chicago: Ready to Learn" community based organization programs or schools in the District that have space available.
- All records will be transferred for continuity, and the Office of Early Childhood Education will track students involved in school actions to determine support needs.
- Students who will turn 5 years old by September 1st and will be attending Kindergarten next year should anticipate attending their neighborhood school.
- If the student was attending an early childhood cluster program, the Office of Special Education and Supports will be working with families to identify the location of the student's school and the family should expect a placement letter.

Transportation

- Provisions for specific student populations (i.e., students with disabilities, Students in Temporary Living Situations, and NCLB qualifying students), as determined by the CPS transportation policy, will continue to apply.

V. Information Regarding Choice of Schools

CPS is committed to providing educational options that fit each student's unique learning needs and each family's priorities, and encourages families to decide if this welcoming school is the best fit for their individual student. To support families in this decision, information from the Office of Access & Enrollment is available:

- Online (www.cps.edu or www.cpsoae.edu),
- By email (oae@cps.edu),
- By phone (773-553-2060), and
- In person (125 S. Clark St., 10th Floor).

Additionally, as described above, Network Chiefs will set aside time specifically to discuss concerns and educational options with families and students affected by this action. Parents and guardians will also have the option of visiting schools of choice prior to making their enrollment decision. This will be facilitated by the Network Office in accordance with all applicable policies.

Recognizing that many families would have applied for other options if they had known their school was going to be affected by school actions, CPS will reopen the application period for families affected by school actions. Students affected by school actions will be given the chance to apply to magnet cluster and neighborhood schools that have available seats. Students must apply and submit an application to the Office of Access & Enrollment by the deadline of April 19, 2013 to be considered. The application has been sent home with your child and is also available at www.cpsoae.org, by calling (773) 553-2060, or in person at 125 S. Clark St., 10th floor.

VI. Public Comment

Community Meetings and Public Hearings:

CPS will hold two community meetings and one formal public hearing regarding this action. Public comment will be accepted during each meeting or hearing. CPS is committed to considering community feedback and will amend this draft transition plan accordingly.

Community Meeting 1	Community Meeting 2	Public Hearing
Monday, April 08, 2013	Thursday, April 11, 2013	Tuesday, April 16, 2013
7:30pm-9:30pm	7:30pm-9:30pm	8:00pm-10:00pm
Amundsen High School	Amundsen High School	CPS Central Office
5110 North Damen Avenue	5110 North Damen Avenue	125 S. Clark St.

Further Questions and Concerns:

If you have any questions or concerns regarding this proposal and the draft transition plan, please call 311 (City Services) or visit www.cps.edu/qualityschools.

Definitions

"Closing" or "closure" means closing a school and assigning all of the students enrolled at that school to one or more designated receiving schools.

"Higher performing school" means:
(1) receiving a higher level on the Performance Policy for the 2011-2012 school year, or
(2) if the 2011-2012 school year level on the Performance Policy is equal, higher performing means performing higher on the majority of the following metrics:

- for elementary schools – for the 2011-2012 school year, percentage of points on the Performance Policy, ISAT composite meets or exceeds score, Value Added reading, and Value Added math,
- for high schools – for the 2011-2012 school year, percentage of points on the Performance Policy, PSAE composite meets or exceeds score, EPAS gains percentile in reading, and EPAS gains percentile in math, or

(3) for elementary schools, if the 2011-2012 school year level on the Performance Policy is equal and the school does not have Value Added metrics, higher performing means a higher percentage of points on the Performance Policy and a higher ISAT meets or exceeds score for the 2011-2012 school year, or
(4) for high schools, if the 2011-2012 school year level on the Performance Policy is equal and the school does not have EPAS metrics, higher performing means a higher percentage of points on the Performance Policy and a higher PSAE composite meets or exceeds score.

"ISAT" stands for Illinois Standard Achievement Test.

"ISAT composite" means the score of the combined ISAT reading, math and science tests.

"Performance Policy" means the Board of Education of the City of Chicago's School Performance, Remediation and Probation Policy, 12-0725-PO2, establishing standards and criteria for placing a school on Remediation or Probation for the 2012-2013 school year based on assessments administered in Spring 2012 and other performance data from prior school years. The score and status are determined by evaluating key indicators that assess a school's current performance, trend over time and student growth.

"School action" means any school closing; school consolidation; co-location; boundary change that requires reassignment of students, unless the reassignment is to a new school with an attendance area boundary and is made to relieve overcrowding; or phase-out.

"Space Utilization Standards" mean the Chicago Public Schools' Space Utilization Standards, found at: http://www.cps.edu/About_CPS/Policies_and_guidelines/Documents/SpaceUtilizationStandards.pdf, establishing standards for determining enrollment efficiency, overcrowding, and underutilization.

"Value Added" means the metric that assesses school effects on students' academic growth, controlling for student characteristics (including, but not limited to, student mobility rates, poverty rates, special education status and bilingual education status), grade level, and prior performance through a regression methodology. Academic growth is measured by the change in scale score points on the ISAT from one year to the next.

CHICAGO PUBLIC SCHOOLS CPS

125 S. Clark Street • Chicago, Illinois 60603 • Phone: (773) 553-1500 • Fax School: (773) 553-1501

Barbara Byrd-Bennett
Chief Executive Officer

DATE: March 21st, 2013

Administrators, Faculty, Staff and LSC Members
Joseph Stockton Elementary School
4420 N. Beacon St.

Administrators, Faculty, Staff and LSC Members
Mary E. Courtenay Elementary Language Arts Center
1726 W. Berteau Ave.

Re: **Board of Education Proposed Closure of Joseph Stockton Elementary School and Relocation of Mary E. Courtenay Elementary Language Arts Center**

Dear Administrators, Faculty, Staff, and Local School Council Members:

As Chief Executive Officer of the Chicago Public Schools (CPS), I am committed to ensuring that every child in every neighborhood receives a high-quality education that prepares them to succeed in college, career, and life. To do so, we must make certain that every child can attend a school that has the supports and resources needed to help every student flourish.

But right now, we have a school utilization crisis that is spreading our limited resources too thin. We are funding half-empty buildings that are costly to maintain and repair instead of using those funds to directly invest in our children's education. Combining schools will allow us to use more resources to ensure that every student attends a higher performing, 21st century school with updated amenities, more individual instruction, and the programs they need to compete and succeed. I have made the commitment that every student and parent will have the clear option to attend a higher performing school in the fall and that is a commitment you can be sure I will keep.

From investments in early childhood education and a full school day to ensuring there are strong principals and teachers in our schools, we are working each and every day towards achieving that goal and doing everything we can to make sure Chicago's children will thrive and succeed.

Make no mistake, this crisis did not happen overnight and we will not fix everything overnight either, but our children need and deserve for all of us to work each and every day to improve their chances to succeed.
As a former teacher and a principal, I've lived through school closings. They are never easy, no matter where you are. But in my 40 years as an educator, I have never felt more certain that we need to take action now. If we do not take action, it is our children and their future that will pay the price for our delay.

I want to assure you that I have heard the concerns of parents, teachers, and school leaders and I have taken them to head and heart: I will never put our students' safety in jeopardy in our efforts to improve their education. As we work to improve our children's quality of education, we will also work to ensure they are supported and safe by coordinating and collaborating with city agencies such as the Chicago Police Department and the Department of Family and Support Services, as well as community and faith-based organizations.

With these principles in mind, and after a thoughtful, rigorous process in which we looked at each school and incorporated the feedback we received from more than 20,000 parents and community members, we are

making multiple proposals today, including a recommendation to close Joseph Stockton Elementary School (Stockton). This proposal helps address CPS' current underutilization challenge, enables us to move forward in a more sound and sustainable financial state, and allows us to better serve all of our students, both current and future.

And please know that our work is still not complete. Your continued input will be critical in the weeks ahead. There will be two community meetings and one public hearing for your school noted below. I thank you for your continued feedback as we work to provide all CPS students with the high-quality education they deserve.

There are a series of supports that we will provide in order for every child to have a safe and seamless transition to a higher performing academic environment at their welcoming school. These include:

- Access to a higher performing welcoming school equipped with new resources;
- A safety plan for all students and staff at all welcoming schools created in coordination with the Chicago Police Department and other community-based organizations;
- Social and emotional supports based on the specific needs of students at each welcoming school;
- Supports for students with diverse learning needs;
- Supports for students in temporary living situations;
- Supports for English language learners; and
- Facility improvements will be made to enhance the overall learning environment of the new school.

Several supports for teacher and PSRP members of the Chicago Teachers' Union (CTU) are also available through our negotiated collective bargaining agreement. These include:

- ***Tenured Teacher Assignment*** – If vacancies are created in the welcoming school(s) due to the enrollment of students from your current school, tenured teachers rated in the top two performance rating categories may be assigned to those vacant positions, based upon seniority and certifications.
- ***Reassigned Teacher Pool*** – Tenured teachers who are ineligible or unable to be assigned to the welcoming school(s) will be placed in the reassigned teacher pool—with full salary and benefits for up to 5 months—while they seek new job opportunities.
- ***PSRP Severance*** – PSRPs at closing schools who are unable to find new employment by the start of next school year will be paid a $1,000 severance and are eligible for up to 9 months of paid COBRA benefits.

CPS has also implemented an Employee Assistance Program (EAP) that provides a safe, confidential environment to access grief counseling with a trained professional. This service is completely free, absolutely confidential, and available to all employees and members of their households, 24 hours per day and 7 days per week. EAP specialists have masters-level training and a minimum of 3 years of counseling experience.

To access EAP services, which also include mediation, and financial services support, please:

- **Call 1-800-711-6087**. When prompted, press '2' for members. You will be asked for your Member ID and you can say "I don't know it" to proceed. Lastly, please press '1' for EAP *[(TDD) Dial 711 and enter number above]*; or
- **Visit http://liveandworkwell.com online**. Web Access Code: 'CPS'.

Lastly, additional transition supports such as dedicated Career Events for teachers impacted by school actions and transition coaching sessions will be available and communicated to you in more detail through the coming weeks and months.

A detailed proposal is outlined below. Please read it and carefully consider the supports we are offering to help students receive a higher performing education in their dedicated welcoming school.

Our Proposal and Investments
Our proposal is that Stockton, located at 4420 N. Beacon St., be closed at the end of the current school year because it is underutilized, based on CPS Space Utilization Standards and student enrollment numbers recorded on the 20th attendance day for the 2012-2013 school year. Specifically, Stockton had 475 students enrolled on the 20th day of attendance, but has the capacity to serve 1,050 students. Stockton students will be welcomed by Mary E. Courtenay Elementary Language Arts Center (Courtenay), and Courtenay will be re-located from its present location to 4420 N. Beacon St. Thus, all Stockton students will continue to attend school at 4420 N Beacon St, welcomed by the Courtenay administration, staff and students. While the closure of Stockton is not related to performance, it is important to note that Courtenay is a higher performing school, according to the Chief Executive Officer's Guidelines for School Actions (Guidelines).

Please take a few moments to carefully review the draft transition plan on this proposed closing that you received at your school. In this draft transition plan you can learn more about why this school has been chosen to be closed and how we intend to make significant investments to help ensure our students' academic success in the transition.

Attendance Area Boundary of Stockton
I am also proposing that the geographic boundary currently associated with Stockton will be reassigned to Courtenay, currently located at 1726 W. Berteau Ave. but proposed to be located at 4420 N. Beacon St. This means that Courtenay will be the new neighborhood school for students living in the Stockton boundary.

Details for the Administrators, Faculty, Staff, and Local School Council Members
If this proposal is approved by the Board of Education of the City of Chicago ("Board"), the employment status of all administrators, faculty, and staff will be determined pursuant to Board policies, practices, and any applicable contracts and collective bargaining agreements. If you have human resources questions or concerns, please contact us at (773)553-4748 (HR4U).

If the Board approves this proposal, the Local School Council (LSC) of Stockton will be dissolved at the end of the current school year. If you have any questions about how this proposal affects the LSC, please contact the Office of Local School Council Relations at 773-553-1400.

Public Comment on this Proposal
Public comment can be made during the following two community meetings and one public hearing:

Community Meeting 1	Community Meeting 2	Public Hearing
Monday, April 08, 2013	Thursday, April 11, 2013	Tuesday, April 16, 2013
7:30pm-9:30pm	7:30pm-9:30pm	8:00pm-10:00pm
Amundsen High School	Amundsen High School	CPS Central Office
5110 North Damen Avenue	5110 North Damen Avenue	125 S. Clark St.

I invite you to share your feedback on this proposal at the community meetings and public hearing. If you wish to comment at the community meetings or hearing, you must sign up to speak on the day of, at the designated location, beginning one hour before the designated start time and ending one hour after the start of the meeting or hearing. You will have two minutes to speak, unless the hearing officer or meeting organizer provides an extension. The hearing will conclude at the stated end time or following the comments of the last person who has signed up to speak, whichever occurs first.

After the community meetings and public hearing, I will review a written report from the hearing officer. At that time, I may recommend that the Board consider and approve the closure of Stockton.

Further Questions and Concerns:
If you have any questions or concerns, please feel free to call 311 (City Services) or visit www.cps.edu/qualityschools.

Sincerely,

Barbara Byrd-Bennett
CEO, Chicago Public Schools

CHICAGO PUBLIC SCHOOLS | CPS

DRAFT TRANSITION PLAN

For the Proposed Closure of Joseph Stockton Elementary School

I. Introduction

Chicago Public Schools (CPS) is committed to ensuring that every student, in every community, has access to a high-quality, well-rounded education in order to graduate from high school ready to succeed in college, career, and life. From investments in early childhood education and a full school day to ensuring that there are effective principals and teachers in our schools, CPS is doing everything possible to provide Chicago's children with a 21st century education that helps them thrive and succeed. It is our obligation to work every day on behalf of our children's future.

However, our District faces a $1 billion deficit, which threatens everything in our system by making it difficult to provide the robust supports and services that all children deserve. Our District's financial crisis is significantly challenged by underutilization, resulting in financial resources being invested in half-empty buildings that are costly to maintain and repair. Currently, CPS is financing schools and buildings with a capacity for 511,000 students while only serving 403,000 students. This utilization crisis is spreading our already scarce financial resources much too thin.

To address this crisis, CPS is proposing a plan to address underutilization based on significant input from partners including parents, students, teachers, principals, community and faith leaders, the independent Commission on School Utilization, the Chicago Police Department, and the Department of Family and Support Services. Through these collaborative efforts, CPS' plan represents a new day for Chicago Public Schools, and a fresh start for our students in Fall 2013.

The plan proposes to close schools that are underutilized. These actions will enable CPS to maximize resources by supporting a reduced number of school buildings, which will improve our capacity to provide all children with greater access to critical resources and supports such as libraries, technology, playgrounds, nurses, and counselors.

In order to ensure a quality education for students, CPS proposes to close Joseph Stockton Elementary School (Stockton). This decision is based on the underutilization of Stockton, in accordance with the Chief Executive Officer's Guidelines for School Actions (Guidelines). This action, if approved, will welcome returning students at Mary E. Courtenay Elementary Language Arts Center (Courtenay), which will be re-located.

The transition plan outlined below summarizes the proposal, identifies the supports that will be provided to impacted students to create a smooth and safe transition process, and notes opportunities for commenting on the action.

II. Summary of Action

Stockton is a neighborhood elementary school located at 4420 N. Beacon St., in the Ravenswood-Ridge Elementary Network of CPS. Stockton currently serves 475 students in PK & K-8th grades. CPS is proposing to close Stockton based on the school's underutilization. The closure meets the criteria of the Guidelines.

As a result of this action, all returning Stockton students will be welcomed by Courtenay. Courtenay will be re-located from its present location to the current Stockton facility, located at 4420 N. Beacon St. Thus, all Stockton students will continue to attend school at 4420 N. Beacon St., welcomed by the Courtenay administration, staff, and students. Families are also encouraged to pursue other educational options at CPS that best meet their student's learning needs and family priorities. Information about educational options is provided in detail in a subsequent section of this transition plan. The proposed investments CPS will make for transitioning students at both Stockton and Courtenay, as described in this transition plan, will provide students with a supportive learning environment and ease the transition process as much as possible.

The geographic boundary currently associated with Stockton will be reassigned to Courtenay, currently located at 1726 W. Berteau Ave. but proposed to be located at 4420 N. Beacon St. This means that Courtenay will be the new neighborhood school for students living in the Stockton boundary.

III. Safety and Security

CPS has engaged multiple experts regarding school safety to make decisions that will ensure children have a seamless transition next year at all welcoming schools. The Office of Safety and Security (OSS), Chicago Police Department, the Department of Family and Support Services, and community and faith partners were all consulted as part of the safety planning process.

CPS has prepared a plan for the safety of students and staff affected by the proposed closure of Stockton and the re-location of Courtenay to 4420 N. Beacon St. OSS will continue to partner on an on-going basis with local community groups, elected officials, sister agencies, and the Chicago Police Department to maintain a smooth and safe transition of students to a new school environment. As part of the transition process, OSS will:

- Review and update school safety audits
- Review security personnel allocations to ensure proper coverage
- Review school safety technology and enhance systems as appropriate
- Address any safety concerns raised by students and staff
- Provide Safe Passage: CPS will invest in additional Safe Passage supports to address the safety of all students and staff traveling to and from school. Safe Passage workers wear identifiable vests and stand on designated street corners to monitor students' safety during their travel to school in the morning and home in the afternoon. Prior to the start of the 2013-2014 school year, OSS will work with the Courtenay administration and the community to designate specific intersections for safe passage supports
- As deemed necessary by OSS, in collaboration with the community, CPS will also provide a transition security officer to assist with safety and security needs.

IV. Supports for Students and Schools

CPS is committed to ensuring a productive and supportive remainder of the 2012-2013 school year at Stockton and Courtenay and ensuring a successful transition for the 2013-2014 school year. To accomplish this, CPS will provide the following supports to meet the academic, social and emotional, and specific learning needs of transitioning students. These resources may be further customized as feedback is obtained at community meetings and a public hearing regarding this action. Additionally, resources may be adjusted to meet the unique needs of the transitioning school population if deemed necessary by the Chief of Schools overseeing this Network.

Academic Needs of Students

If this proposal is approved, Stockton will be welcomed by Courtenay, which is a higher performing school. To ensure Stockton students receive high-quality academic instruction throughout the transition, Stockton and Courtenay will receive:

- Principal Transition Coordinator (PTC): PTCs are former principals, or other administrators with significant experience, who will be a resource to help the principal of Stockton maintain academic rigor in the classroom and ensure a smooth transition to Courtenay. The PTC will ensure continuity of support for faculty and students in the 2013-2014.
- Data Support: Preparation and planning are key to ensuring the right supports are in place and ready for the beginning of the school year. To help facilitate a smooth transition for all students, CPS will provide Courtenay with comprehensive data on all transitioning students. Student-specific data such as test scores, attendance, and grades will enable all school staff to proactively identify and prepare to meet the needs of every student.

- Network Chief Office Hours: Network Chiefs, who oversee a geographic network of schools, will set aside dedicated time to discuss concerns and educational options with families and students affected by this action. For specific dates and times, please contact your school or Network office.

Additionally, Stockton and Courtenay will receive discretionary resources to provide direct academic support to students. Principals, with local community input, will decide how best to utilize these resources. Selections will be approved by the Network Chief. Options for use include, but are not limited to:

- Instructional Coach or Teacher Leader: An instructional coach or teacher leader will ensure instruction quality remains high as students transition so that they do not lose any momentum.
- Academic tutoring resources: Resources for an academic tutoring position or program in reading and math may be provided.

Social Emotional Needs of Students

CPS understands that whenever students transition to a new school, additional support is needed to help them adjust. CPS will provide resources and work with schools to design a school-specific program of support which may include items such as:

- Intervention groups or peace circles aimed at helping students work through concerns associated with the transition as needed.
- Implementing restorative practices (such as peer circles and peer juries) to encourage peer-to-peer problem solving and resolution.
- Access to highly structured interventions for smaller groups of students in need of more individualized attention.
- Student Leadership and Culture-Building Activities: To foster an environment that is both supportive and inclusive for all students, CPS will provide resources to school leadership to help create positive relationships among students and implement culture-building activities (such as staff luncheons and team- and trust-building activities).

Additionally, CPS believes cultural integration of the two school communities is important for a successful, smooth transition. To support this, CPS will provide resources for "Fresh Start" Activities. Courtenay will be provided discretionary resources to implement "get to know your new school" activities, such as visits for families, coffee chats with the welcoming principal, picnics, field trips, and parent meetings.

Support for Specific Students Needs

To ensure students at Stockton who have unique needs or circumstances are adequately supported in this transition, CPS will provide the Network with additional resources to work directly with families and assist in explaining their school options. Additionally, CPS will provide the following:

Students with Diverse Learning Needs

- Students with disabilities at Stockton will continue to be provided instructional support both in the general education classroom and in small group or individual settings, in accordance with their Individualized Education Programs (IEPs) for the 2012-2013 school year.
- Once students transition to Courtenay, all instructional, clinical and related services will be provided in accordance with their IEPs. All specialized services, including nursing, speech, occupational therapy, physical therapy, social work, psychology, assistive technology support, and special education instruction will continue to be provided in the manner stated on each student's current IEP.
- CPS will work with Courtenay to ensure classrooms are set up to meet student needs, to schedule all students in accordance with IEPs, and ensure there is adequate staff to fully implement student IEPs.
- In addition, to ensure IEP implementation, CPS will review all IEPs with the staff at Courtenay, provide observations of classrooms when school has resumed, and train Courtenay staff on specialized equipment for specific student needs.

- CPS will also provide disability awareness training to staff at Courtney targeting training based on the unique population of the students in the school.
- The facility at 4420 N. Beacon St. is not accessible to persons with disabilities according to the Americans with Disabilities Act. For more information about a particular school, contact the CPS Director of ADA Policy at (773) 553-2158.

Students in Temporary Living Situations

- The CPS Office of Students in Temporary Living Situations (OSTLS) will continue the supports currently provided to Students in Temporary Living Situations (STLS) as required by law and as they transition to a new school. These include free school meals, enrollment support, provision of required school uniforms and school supplies as needed, transportation assistance when eligible, and waiver of all school related fees.
- Students in Temporary Living Situations will be encouraged to attend cultural integration and welcoming events to introduce them to their new school, teachers, and administrators, as described above.
- STLS students affected by this action may choose to attend Courtenay or meet with OSTLS staff to identify enrollment options available. For families currently enrolled in the STLS program, younger siblings may attend the same school that their older sibling elects under this proposed action.
- Additionally, CPS will provide professional development and support to Courtenay staff on providing transition services for STLS students.

English Language Learners (ELL)

- Current and future ELLs attending Courtenay will receive state mandated transitional bilingual program services which include, depending on the number of ELLs enrolled, certified Bilingual and English as a Second Language (ESL) teachers and/or support from the Department of Language and Cultural Education (DoLCE).
- In addition, CPS will assist Courtenay in serving students based on their language and learning needs.
- Schools that welcome newcomers to the United States will be provided student orientation kits and will receive assistance from CPS to coordinate with resettlement centers, translation/interpretation services, tutoring services in the native language, and social-emotional supports tailored to their specific needs.

Early Childhood Participants

- Students and families currently enrolled in CPS early childhood programs affected by school actions will be offered support for placement in the designated welcoming school when possible. In cases where this is not possible, efforts will be made to support families in placement through "Chicago: Ready to Learn" community based organization programs or schools in the District that have space available.
- All records will be transferred for continuity, and the Office of Early Childhood Education will track students involved in school actions to determine support needs.
- Students who will turn 5 years old by September 1st and will be attending Kindergarten next year should anticipate attending their neighborhood school.
- If the student was attending an early childhood cluster program, the Office of Special Education and Supports will be working with families to identify the location of the student's school and the family should expect a placement letter.

Transportation

- Provisions for specific student populations (i.e., students with disabilities, Students in Temporary Living Situations, and NCLB qualifying students), as determined by the CPS transportation policy, will continue to apply.

V. Information Regarding Choice of Schools

CPS is committed to providing educational options that fit each student's unique learning needs and each family's priorities, and encourages families to decide if this welcoming school is the best fit for their individual student. To support families in this decision, information from the Office of Access & Enrollment is available:

- Online (www.cps.edu or www.cpsoae.edu),
- By email (oae@cps.edu),
- By phone (773-553-2060), and
- In person (125 S. Clark St., 10th Floor).

Additionally, as described above, Network Chiefs will set aside time specifically to discuss concerns and educational options with families and students affected by this action. Parents and guardians will also have the option of visiting schools of choice prior to making their enrollment decision. This will be facilitated by the Network Office in accordance with all applicable policies.

Recognizing that many families would have applied for other options if they had known their school was going to be affected by school actions, CPS will reopen the application period for families affected by school actions. Students affected by school actions will be given the chance to apply to magnet cluster and neighborhood schools that have available seats. Students must apply and submit an application to the Office of Access & Enrollment by the deadline of April 19, 2013 to be considered. The application has been sent home with your child and is also available at www.cpsoae.org, by calling (773) 553-2060, or in person at 125 S. Clark St., 10th floor.

VI. Public Comment

Community Meetings and Public Hearings:

CPS will hold two community meetings and one formal public hearing regarding this action. Public comment will be accepted during each meeting or hearing. CPS is committed to considering community feedback and will amend this draft transition plan accordingly.

Community Meeting 1	Community Meeting 2	Public Hearing
Monday, April 08, 2013	Thursday, April 11, 2013	Tuesday, April 16, 2013
7:30pm-9:30pm	7:30pm-9:30pm	8:00pm-10:00pm
Amundsen High School	Amundsen High School	CPS Central Office
5110 North Damen Avenue	5110 North Damen Avenue	125 S. Clark St.

Further Questions and Concerns:

If you have any questions or concerns regarding this proposal and the draft transition plan, please call 311 (City Services) or visit www.cps.edu/qualityschools.

Definitions

"Closing" or "closure" means closing a school and assigning all of the students enrolled at that school to one or more designated receiving schools.

"Higher performing school" means:
(1) receiving a higher level on the Performance Policy for the 2011-2012 school year, or
(2) if the 2011-2012 school year level on the Performance Policy is equal, higher performing means performing higher on the majority of the following metrics:

- for elementary schools – for the 2011-2012 school year, percentage of points on the Performance Policy, ISAT composite meets or exceeds score, Value Added reading, and Value Added math,
- for high schools – for the 2011-2012 school year, percentage of points on the Performance Policy, PSAE composite meets or exceeds score, EPAS gains percentile in reading, and EPAS gains percentile in math, or

(3) for elementary schools, if the 2011-2012 school year level on the Performance Policy is equal and the school does not have Value Added metrics, higher performing means a higher percentage of points on the Performance Policy and a higher ISAT meets or exceeds score for the 2011-2012 school year, or
(4) for high schools, if the 2011-2012 school year level on the Performance Policy is equal and the school does not have EPAS metrics, higher performing means a higher percentage of points on the Performance Policy and a higher PSAE composite meets or exceeds score.

"ISAT" stands for Illinois Standard Achievement Test.

"ISAT composite" means the score of the combined ISAT reading, math and science tests.

"Performance Policy" means the Board of Education of the City of Chicago's School Performance, Remediation and Probation Policy, 12-0725-PO2, establishing standards and criteria for placing a school on Remediation or Probation for the 2012-2013 school year based on assessments administered in Spring 2012 and other performance data from prior school years. The score and status are determined by evaluating key indicators that assess a school's current performance, trend over time and student growth.

"School action" means any school closing; school consolidation; co-location; boundary change that requires reassignment of students, unless the reassignment is to a new school with an attendance area boundary and is made to relieve overcrowding; or phase-out.

"Space Utilization Standards" mean the Chicago Public Schools' Space Utilization Standards, found at: http://www.cps.edu/About_CPS/Policies_and_guidelines/Documents/SpaceUtilizationStandards.pdf, establishing standards for determining enrollment efficiency, overcrowding, and underutilization.

"Value Added" means the metric that assesses school effects on students' academic growth, controlling for student characteristics (including, but not limited to, student mobility rates, poverty rates, special education status and bilingual education status), grade level, and prior performance through a regression methodology. Academic growth is measured by the change in scale score points on the ISAT from one year to the next.

BOARD OF EDUCATION OF THE CITY OF CHICAGO

In The Matters Of:

PUBLIC HEARINGS ON THE PROPOSALS OF THE CHIEF EXECUTIVE OFFICER TO CLOSE, PHASE-OUT, AND CO-LOCATE SCHOOLS

AFFIDAVIT OF JEFF BROOM

I, JEFF BROOM, state as follows:

1. I am a resident of Illinois, of legal age, and competent to give testimony under oath. I have personal knowledge of the matters contained in this affidavit. If called to testify in the above-captioned proceeding, I would testify as to the matters stated in this affidavit.

2. I am currently employed as a Performance Data Analyst at the Chicago Board of Education.

3. In connection with the recently announced proposals of the Chief Executive Officer to close, phase-out, and co-locate schools, letters signed by the Chief Executive Officer were addressed to the parents or guardians, administrators, faculty, staff, Local School Council members, and board members for charter schools, of all proposed closing, welcoming, and co-locating schools. The purpose of the letters was to advise all recipients of the Chief Executive Officer's proposals, provide an explanation of the basis for the proposed actions, identify how the proposed actions meet the criteria set forth in the Guidelines for School Actions, and inform recipients of the date, time, and place of the hearings and meetings to be held for public comment on the proposals. Also included with the letters were draft transition plans outlining the specific supports that the Chicago Board of Education plans to implement at the affected schools if the proposals are approved.

4. On or about March 16, 2013, I caused copies of letters addressed to the parents or guardians, administrators, faculty, staff, Local School Council members, and board members for charter schools, and draft transition plans for the schools listed below ("affected schools") to be delivered to Lowitz & Sons Inc., GEM Printing, Inc., and K&M Printing for printing and packaging for delivery.

5. On or about March 16, 2013, I caused home addresses of record for students enrolled in affected schools, copies of the letters addressed to the parents or guardians, and draft transition plans for all affected schools to be delivered to K&M Printing for mailing.

6. On information and belief, the letters addressed to parents or guardians and draft transition plans were mailed by K&M Printing to the home addresses of the parents or guardians of students enrolled at the affected schools on or about March 21, 2013, or March 22, 2013 as detailed in paragraph 9.

7. On information and belief, letters and draft transition plans were delivered to affected schools by Lowitz & Sons Inc., GEM Printing, Inc., and K&M Printing for personal delivery to administrators, faculty, staff, students, and Local School Council members on March 21, 2013, or March 22, 2013 as detailed in paragraph 9.

8. On information and belief, Lowitz & Sons Inc. printed and packaged for delivery letters and draft transition plans addressed to the parents or guardians, administrators, faculty, staff, Local School Council members, and board members for charter schools, of the following schools for the proposals specified:

    a. George Leland Elementary School regarding Proposed Closure of Louis Armstrong Math & Science Elementary School and Relocation of George Leland Elementary School and the Proposed Closure

of Horatio May Elementary Community Academy and Relocation of George Leland Elementary School

b. Benjamin Banneker Elementary School and Benjamin E. Mays Elementary Academy regarding the Proposed Closure of Benjamin Banneker Elementary School and Relocation of Benjamin E. Mays Elementary Academy
c. Mary McLeod Bethune Elementary School and John Milton Gregory Elementary School regarding the Proposed Closure of Mary McLeod Bethune Elementary School
d. Arna Wendell Bontemps Elementary School and Nicholson Technology Academy regarding the Proposed Closure of Arna Wendell Bontemps Elementary School
e. Bowen High school regarding the Proposed Co-Location of a new Noble Street Charter School campus with Bowen High School
f. John Calhoun North Elementary School regarding the Proposed Closure of John Calhoun North Elementary School
g. Miriam G. Canter Middle School, Williams H. Ray Elementary School, and Bret Harte Elementary School regarding the Proposed Closure of Miriam G. Canter Middle School
h. George H. Corliss High School regarding the Proposed Co-Location of a new Noble Street Charter School campus with George H. Corliss High School
i. Richard T. Crane Technical Preparatory High School regarding the Proposed Co-Location of Richard T. Crane Medical Preparatory High School with Chicago Talent Development High School and Richard T. Crane Technical Preparatory High School
j. Genevieve Melody Elementary School regarding the Proposed Closure of Edward C. Delano Elementary School and Relocation of Genevieve Melody Elementary School
k. Oscar DePriest Elementary School regarding the Proposed Closure of Robert Emmet Elementary School
l. James Wadsworth Elementary School and Dumas Technology Academy regarding the Proposed Closure of James Wadsworth Elementary School and Relocation of Dumas Technology Academy
m. Charles Sumner Math & Science Community Academy Elementary School regarding the Proposed Closure of Leif Ericson Elementary Scholastic Academy
n. Enrico Fermi Elementary School and South Shore Fine Arts Academy regarding the Proposed Closure of Enrico Fermi Elementary School
o. Garfield Park Preparatory Academy Elementary School and Michael Faraday Elementary School regarding the Proposed Closure of Garfield Park Preparatory Academy Elementary School
p. Marcus Moziah Garvey Elementary School and Mount Vernon Elementary School regarding the Proposed Closure of Marcus Moziah Garvey Elementary School
q. Nathan R. Goldblatt Elementary School regarding the Proposed Closure of Nathan R. Goldblatt Elementary School
r. Walter Q. Gresham Elementary School and Kwame Nkrumah Academy Elementary School regarding the Proposed Co-Location of Kwame Nkrumah Academy Elementary School with Walter Q. Gresham Elementary School
s. Hope College Preparatory High School regarding the Proposed Co-Location of a new KIPP Middle School Campus with Hope College Preparatory High School
t. Matthew A. Henson Elementary School regarding the Proposed Closure of Matthew A. Henson Elementary School
u. Victor Herbert Elementary School regarding the Proposed Closure of Victor Herbert Elementary School and Relocation of Robert Nathaniel Dett Elementary School
v. Mahalia Jackson Elementary School and Fort Dearborn Elementary school regarding the Proposed Closure of Mahalia Jackson Elementary School
w. William H. King Elementary School and Jensen Elementary Scholastic Academy regarding the Proposed Closure of William H. King Elementary School
x. Alfred David Kohn Elementary School, Countee Cullen Elementary School, Langston Hughes Elementary School, and Mildred I. Lavizzo Elementary School regarding the Proposed Closure of Alfred David Kohn Elementary School

y. Robert H. Lawrence Elementary School and Burnham Elementary Inclusive Academy regarding the Proposed Closure of Robert H. Lawrence Elementary School and Relocation of Burnham Elementary Inclusive Academy
z. Guglielmo Marconi Elementary Community Academy and George W. Tilton Elementary School regarding the Proposed Closure of Guglielmo Marconi Elementary Community Academy
aa. Garrett A. Morgan Elementary School and William H. Ryder Math & Science Specialty Elementary School regarding the Proposed Closure of Garrett A. Morgan Elementary School
bb. Moses Montefiore Special Elementary School and Kate S. Buckingham Special Education Center regarding the Proposed Closure of Kate S. Buckingham Special Education Center
cc. Moses Montefiore Special Elementary School regarding the Proposed Closure of Near North Elementary School
dd. Luke O'Toole Elementary School and The Montessori School of Englewood Charter regarding the Proposed Co-Location of The Montessori School of Englewood Charter with Luke O'Toole Elementary School
ee. Jesse Owens Elementary Community Academy and Samuel Gompers Fine Arts Options Elementary School regarding the Proposed Closure of Jesse Owens Elementary Community Academy
ff. Ignance Paderewski Elementary Learning Academy, Rosario Castellanos Elementary School, and Lazaro Cardenas Elementary School regarding the Proposed Closure of Ignance Paderewski Elementary Learning Academy
gg. Nathaniel Pope Elementary School and James Weldon Johnson Elementary School regarding the Proposed Closure of Nathaniel Pope Elementary School
hh. Noble Street Charter – Gary Comer College Prep and Paul Revere Elementary School regarding the Proposed Co-Location of Noble Street Charter – Gary Comer College Prep with Paul Revere Elementary School
ii. Songhai Elementary Learning Institute and George W. Curtis Elementary School regarding the Proposed Closure of Songhai Elementary Learning Institute
jj. West Pullman Elementary School and Alex Haley Elementary Academy regarding the Proposed Closure of West Pullman Elementary School
kk. Granville T. Woods Math & Science Academy Elementary School and Perkins Bass Elementary School regarding the Proposed Closure of Granville T. Woods Math & Science Academy Elementary School
ll. Elihu Yale Elementary School and John Harvard Elementary School of Excellence regarding the Proposed Closure of Elihu Yale Elementary School
mm. Mary Mapes Dodge Elementary Renaissance Academy and Morton School of Excellence regarding the Proposed Co-Location of Mary Mapes Dodge Elementary Renaissance Academy with Morton School of Excellence

9. On information and belief, Lowitz & Sons Inc. printed and packaged for delivery letters and draft transition plans addressed to the parents or guardians, administrators, faculty, staff, Local School Council members, and board members for charter schools, of the following schools for the proposals specified on March 22, 2013:

a. John P. Altgeld Elementary School and Daniel S. Wentworth Elementary School regarding Proposed Closure of John P. Altgeld Elementary School and Relocation of Daniel S. Wentworth Elementary School
b. Elaine O. Goodlow Elementary Magnet School and Charles W. Earle Elementary School regarding the Proposed Closure of Elaine O. Goodlow Elementary Magnet School and Relocation of Charles W. Earle Elementary School

10. On information and belief, GEM Printing, Inc. printed and packaged for delivery letters and draft transition plans addressed to the parents or guardians, administrators, faculty, staff, Local School Council members, and board members for charter schools, the following schools for the proposals specified:

a. Crispus Attucks Elementary School and Ludwig Van Beethoven Elementary School regarding the Proposed Phase-Out of Crispus Attucks Elementary School
b. John B. Drake Elementary School and Urban Prep Academy for Young Men – Bronzeville regarding Proposed Co-Location of John B. Drake Elementary School with Urban Prep Academy for Young Men - Bronzeville
c. William J. & Charles H. Mayo Elementary School and Ida B. Wells Preparatory Elementary Academy regarding the Proposed Closure of William J. & Charles H. Mayo Elementary School and Relocation of Ida B. Wells Preparatory Elementary Academy
d. Anthony Overton Elementary School and Irvin C. Mollison Elementary School regarding the Proposed Closure of Anthony Overton Elementary School
e. Francis Parkman Elementary School and Jesse Sherwood Elementary School regarding the Proposed Closure of Francis Parkman Elementary School
f. Pershing West Middle School and John J. Pershing Elementary Humanities Magnet regarding the Proposed Closure of Pershing West Middle School and Relocation of John J. Pershing Elementary Humanities Magnet
g. Betsey Ross Elementary School and John Foster Dulles Elementary School regarding the Proposed Closure of Betsey Ross Elementary School
h. Austin O. Sexton Elementary School and John Fiske Elementary School regarding the Proposed Closure of Austin O. Sexton Elementary School and Relocation of John Fiske Elementary School
i. Williams Multiplex Elementary School and John B. Drake Elementary School regarding the Proposed Closure of Williams Multiplex Elementary School and Relocation of John B. Drake Elementary School
j. Williams Preparatory Academy Middle School and John B. Drake Elementary School regarding the Proposed Closure of Williams Preparatory Academy Middle School and Relocation of John B. Drake Elementary School

11. On information and belief, K&M Printing printed and packaged for delivery letters and draft transition plans addressed to the parents or guardians, administrators, faculty, staff, Local School Council members, and board members for charter schools, of the following schools for the proposals specified:

a. Louis Armstrong Math & Science Elementary School regarding the Proposed Closure of Louis Armstrong Math & Science Elementary School and Relocation of George Leland Elementary School
b. Horatio May Elementary Community Academy regarding the Proposed Closure of Horatio May Elementary Community Academy and Relocation of George Leland Elementary School
c. Willa Cather Elementary School regarding the Proposed Closure of John Calhoun North Elementary School
d. Chicago Talent Development High School regarding the Proposed Co-Location of Richard T. Crane Medical Preparatory High School with Chicago Talent Development High School and Richard T. Crane Technical Preparatory High School
e. Edward C. Delano Elementary School regarding the Proposed Closure of Edward C. Delano Elementary School and Relocation of Genevieve Melody Elementary School
f. Ana Roque de Duprey Elementary School and Jose De Diego Elementary Community Academy regarding the Proposed Closure of Ana Roque de Duprey Elementary School
g. Alexander von Humboldt Elementary School and Jose De Diego Elementary Community Academy regarding the Proposed Closure of Alexander von Humboldt Elementary School
h. Robert Emmet Elementary School and Edward K. Ellington Elementary regarding the Proposed closure of Robert Emmet Elementary School
i. Leif Ericson Elementary Scholastic Academy regarding the Proposed Closure of Leif Ericson Elementary Scholastic Academy
j. Helen M. Hefferan Elementary School regarding the Proposed Closure of Nathan R. Goldblatt Elementary School
k. Charles Evans Hughes Elementary School regarding the Proposed Closure of Matthew A. Henson Elementary School

l. Robert Nathaniel Dett Elementary School regarding the Proposed Closure of Victor Herbert Elementary School and Relocation of Robert Nathaniel Dett Elementary School
m. Francis Scott Key Elementary School and Edward K. Ellington Elementary School regarding the Proposed Closure of Francis Scott Key Elementary School
n. Jean D. Lafayette Elementary School and Frederic Chopin Elementary School regarding the Proposed Closure of Jean D. Lafayette Elementary School
o. George Manierre Elementary School and Edward Jenner Elementary Academy of the Arts regarding the Proposed Closure of George Manierre Elementary School
p. Disney II Magnet School and Thurgood Marshall Middle School regarding the Proposed Co-Location of Disney II Magnet School with Thurgood Marshall Middle School
q. Near North Elementary School regarding the Proposed Closure of Near North Elementary School
r. Belmont-Cragin Elementary School and Northwest Middle School regarding the Proposed Co-Location of Belmont-Cragin Elementary School with Northwest Middle School
s. Elizabeth Peabody Elementary School and James Otis Elementary School regarding the Proposed Closure of Elizabeth Peabody Elementary School
t. Martin A. Ryerson Elementary School and Laura S. Ward Elementary School regarding the Proposed Closure of Martin A. Ryerson Elementary School and Relocation of Laura S. Ward Elementary School
u. Graeme Stewart Elementary School and Joseph Brennemann Elementary School regarding the Proposed Closure of Graeme Stewart Elementary School
v. Joseph Stockton Elementary School and Mary E. Courtenay Elementary Language Arts Center regarding the Proposed Closure of Joseph Stockton Elementary School and Relocation of Mary E. Courtenay Elementary Language Arts Center
w. Lyman Trumbull Elementary School, John T. McCutcheon Elementary School, James B. McPherson Elementary School, and Eliza Chappell Elementary School regarding the Proposed Closure of Lyman Trumbull Elementary School

12. On information and belief, letters addressed to the board members for Noble Street Charter Schools, Urban Prep Academies, Kwame Nkrumah Charter Academy, The Montessori School of Englewood, and Chicago Talent Development Charter High School were mailed to the charter school address on or about March 21, 2013 in connection with the following proposals:

a. Proposed Co-Location of Noble Street Charter – Gary Comer College Prep with Paul Revere Elementary School
b. Proposed Co-Location of John B. Drake Elementary School with Urban Prep Academy for Young Men - Bronzeville
c. Proposed Co-Location of Kwame Nkrumah Academy Elementary School with Walter Q. Gresham Elementary School
d. Proposed Co-Location of The Montessori School of Englewood Charter with Luke O'Toole Elementary School
e. Proposed Co-Location of Richard T. Crane Medical Preparatory High School with Chicago Talent Development High School and Richard T. Crane Technical Preparatory High School

13. On information and belief, letters addressed to the board members for Noble Street Charter Schools and KIPP Chicago College Prep Public Schools were sent via electronic mail to the Noble Street Charter School board president and KIPP Chicago College Prep Public Schools board president on or about March 21, 2013 in connection with the following proposals:

a. Proposed Co-Location of a new Noble Street Charter School campus with Bowen High School
b. Proposed Co-Location of a new Noble Street Charter School campus with George H. Corliss High School
c. Proposed Co-Location of a new KIPP Middle School Campus with Hope College Preparatory High School

VERIFICATION BY CERTIFICATION

Under penalties as provided by law pursuant to Section 1-109 of the Illinois Code of Civil Procedure, the undersigned certifies that the statements set forth in this instrument are true and correct, except as to matters therein stated to be on information and belief and as to such matters the undersigned certifies as aforesaid that he verily believes the same to be true.

JEFF BROOM

BOARD OF EDUCATION OF THE CITY OF CHICAGO

In The Matters Of:

PUBLIC HEARINGS ON THE PROPOSALS OF THE CHIEF EXECUTIVE OFFICER TO CLOSE, PHASE-OUT, AND CO-LOCATE SCHOOLS

AFFIDAVIT OF LEONARD LANGSTON

I, LEONARD LANGSTON, state as follows:

A. I am a resident of Illinois, of legal age, and competent to give testimony under oath. I have personal knowledge of the matters contained in this affidavit. If called to testify in the above-captioned proceeding, I would testify as to the matters stated in this affidavit.

B. I am currently employed as the Chief of Staff for Public and Community Affairs at the Chicago Board of Education.

C. In connection with the proposals of the Chief Executive Officer to close, phase-out, and co-locate schools, I sent notices to each school's State Senator, State Representative, and Chicago City Council Alderman. The notices were sent via electronic mail and included attached Notice Letters, dated March 21, 2013, and Draft Transition Plan.

D. The following electronic mail messages were sent on March 21, 2013:

1. In connection with the proposal to close John P. Altgeld Elementary School and relocate Daniel S. Wentworth Elementary School, I sent notice to the following elected officials: Senator Jacqueline Y. Collins of the 16th District of the Illinois Legislature, Representative Andre M. Thapedi of the 32nd District of the Illinois Legislature, and Alderman Latasha R. Thomas of the 17th Ward of the Chicago City Council.

2. In connection with the proposal to phase-out and close Crispus Attucks Elementary School, I sent notice to the following elected officials: Senator Mattie Hunter of the 3rd District of the Illinois Legislature, Representative Kenneth Dunkin of the 5th District of the Illinois Legislature, and Alderman Pat Dowell of the 3rd Ward of the Chicago City Council.

3. In connection with the proposal to close Benjamin Banneker Elementary School and relocate Benjamin E. Mays Elementary Academy, I sent notice to the following elected officials: Senator Mattie Hunter of the 3rd District of the Illinois Legislature, Representative Esther Golar of the 6th District of the Illinois Legislature, Alderman Roderick T. Sawyer of the 6th Ward of the Chicago City Council, and Alderman JoAnn Thompson of the 16th Ward of the Chicago City Council.

4. In connection with the proposal to co-locate Belmont-Cragin Elementary School with Northwest Middle School, I sent notice to the following elected officials: Senator William Delgado of the 2nd District of the Illinois Legislature, Representative Luis Arroyo of the 3rd District of the Illinois Legislature, Alderman Ariel Reboyras of the 30th Ward of the Chicago City Council, and Alderman Emma Mitts of the 37th Ward of the Chicago City Council.

5. In connection with the proposal to close Mary McLeod Bethune Elementary School, I sent notice to the following elected officials: Senator Patricia Van Pelt of the 5th District of the Illinois Legislature, Representative Arthur Turner of the 9th District of the Illinois Legislature, Alderman Jason C. Ervin of the 28th Ward of the Chicago City Council, and Alderman Michael Chandler of the 24th Ward of the Chicago City Council.

6. In connection with the proposal to close Arna Wendell Bontemps Elementary School, I sent notice to the following elected officials: Senator Mattie Hunter of the 3rd District of the Illinois Legislature, Representative Esther Golar of the 6th District of the Illinois Legislature, and Alderman JoAnn Thompson of the 16th Ward of the Chicago City Council.

7. In connection with the proposal to co-locate a new Noble Street Charter School campus with Bowen High School, I sent notice to the following elected officials: Senator Donne E. Trotter of the 17th District of the Illinois Legislature, Representative Marcus C. Evans, Jr. of the 33rd District of the Illinois Legislature, and Alderman Natashia L. Holmes of the 7th Ward of the Chicago City Council.

8. In connection with the proposal to close Kate S. Buckingham Special Education Center, I sent notice to the following elected officials: Senator Kwame Raoul of the 13th District of the Illinois Legislature, Senator Patricia Van Pelt of the 5th District of the Illinois Legislature, Representative Barbara Flynn Currie of the 25th District of the Illinois Legislature, Representative Arthur Turner of the 9th District of the Illinois Legislature, Alderman Natashia L. Holmes of the 7th Ward of the Chicago City Council, and Alderman Robert Fioretti of the 2nd Ward of the Chicago City Council.

9. In connection with the proposal to close John Calhoun North Elementary School, I sent notice to the following elected officials: Senator Patricia Van Pelt of the 5th District of the Illinois Legislature, Representative Derrick Smith of the 10th District of the Illinois Legislature, and Alderman Robert Fioretti of the 2nd Ward of the Chicago City Council.

10. In connection with the proposal to close Miriam G. Canter Middle School, I sent notice to the following elected officials: Senator Kwame Raoul of the 13th District of the Illinois Legislature, Representative Barbara Flynn Currie of the 25th District of the Illinois Legislature, Alderman William D. Burns of the 4th Ward of the Chicago City Council, and Alderman Leslie A. Hairston of the 5th Ward of the Chicago City Council.

11. In connection with the proposal to co-locate Richard T. Crane Medical Preparatory High School with Chicago Talent Development High School and Richard T. Crane Technical Preparatory High School, I sent notice to the following elected officials: Senator Patricia Van Pelt of the 5th District of the Illinois Legislature, Representative Derrick Smith of the 10th District of the Illinois Legislature, and Alderman Robert Fioretti of the 2nd Ward of the Chicago City Council.

12. In connection with the proposal to co-locate a new Noble Street Charter School campus with George H. Corliss High School, I sent notice to the following elected officials: Senator Donne E. Trotter of the 17th District of the Illinois Legislature, Representative Elgie R. Sims, Jr. of the 34th District of the Illinois Legislature, and Alderman Anthony A. Beale of the 9th Ward of the Chicago City Council.

13. In connection with the proposal to close Edward C. Delano Elementary School and relocate Genevieve Melody Elementary School, I sent notice to the following elected officials: Senator Patricia Van Pelt of the 5th District of the Illinois Legislature, Representative Derrick Smith of the 10th District of the Illinois Legislature, Alderman Jason C. Ervin of the 28th Ward of the Chicago City Council, and Alderman Michael Chandler of the 24th Ward of the Chicago City Council.

14. In connection with the proposal to co-locate Disney II Magnet School with Thurgood Marshall Middle School, I sent notice to the following elected officials: Senator Iris Y. Martinez of the 20th District of the Illinois Legislature, Representative Deborah Mell of the 40th District of the Illinois Legislature, Alderman Timothy M. Cullerton of the 38th Ward of the Chicago City Council, and Alderman Margaret Laurino of the 39th Ward of the Chicago City Council.

15. In connection with the proposal to co-locate Mary Mapes Dodge Elementary Renaissance Academy with Morton School of Excellence, I sent notice to the following elected officials: Senator Patricia Van Pelt of

the 5th District of the Illinois Legislature, Representative Derrick Smith of the 10th District of the Illinois Legislature, Alderman Robert Fioretti of the 2nd Ward of the Chicago City Council, and Alderman Walter Burnett of the 27th Ward of the Chicago City Council.

16. In connection with the proposal to close Dumas Technology Academy and relocate James Wadsworth Elementary School, I sent notice to the following elected officials: Senator Kwame Raoul of the 13th District of the Illinois Legislature, Representative Christian L. Mitchell of the 26th District of the Illinois Legislature, Alderman Leslie A. Hairston of the 5th Ward of the Chicago City Council, and Alderman Willie B. Cochran of the 20th Ward of the Chicago City Council.

17. In connection with the proposal to close Ana Roque de Duprey Elementary School, I sent notice to the following elected officials: Senator William Delgado of the 2nd District of the Illinois Legislature, Representative Cynthia Soto of the 4th District of the Illinois Legislature, Alderman Roberto Maldonado of the 26th Ward of the Chicago City Council, and Alderman Proco (Joe) Moreno of the 1st Ward of the Chicago City Council.

18. In connection with the proposal to close Robert Emmet Elementary School, I sent notice to the following elected officials: Senator Kimberly A. Lightford of the 4th District of the Illinois Legislature, Representative La Shawn K. Ford of the 8th District of the Illinois Legislature, and Alderman Deborah L. Graham of the 29th Ward of the Chicago City Council.

19. In connection with the proposal to close Leif Ericson Elementary Scholastic Academy, I sent notice to the following elected officials: Senator Patricia Van Pelt of the 5th District of the Illinois Legislature, Representative Derrick Smith of the 10th District of the Illinois Legislature, Alderman Jason C. Ervin of the 28th Ward of the Chicago City Council, and Alderman Michael Chandler of the 24th Ward of the Chicago City Council.

20. In connection with the proposal to close Enrico Fermi Elementary School, I sent notice to the following elected officials: Senator Kwame Raoul of the 13th District of the Illinois Legislature, Representative Christian L. Mitchell of the 26th District of the Illinois Legislature, and Alderman Leslie A. Hairston of the 5th Ward of the Chicago City Council.

21. In connection with the proposal to close Garfield Park Preparatory Academy Elementary School, I sent notice to the following elected officials: Senator Patricia Van Pelt of the 5th District of the Illinois Legislature, Representative Derrick Smith of the 10th District of the Illinois Legislature, and Alderman Jason C. Ervin of the 28th Ward of the Chicago City Council.

22. In connection with the proposal to close Marcus Moziah Garvey Elementary School, I sent notice to the following elected officials: Senator Emil Jones, III of the 14th District of the Illinois Legislature, Representative Monique D. Davis of the 27th District of the Illinois Legislature, and Alderman Carrie M. Austin of the 34th Ward of the Chicago City Council.

23. In connection with the proposal to close Nathan R. Goldblatt Elementary School, I sent notice to the following elected officials: Senator Patricia Van Pelt of the 5th District of the Illinois Legislature, Representative Derrick Smith of the 10th District of the Illinois Legislature, and Alderman Jason C. Ervin of the 28th Ward of the Chicago City Council.

24. In connection with the proposal to close Elaine O. Goodlow Elementary Magnet School and relocate Charles W. Earle Elementary School, I sent notice to the following elected officials: Senator Mattie Hunter of the 3rd District of the Illinois Legislature, Representative Esther Golar of the 6th District of the Illinois Legislature, and Alderman Toni Foulkes of the 15th Ward of the Chicago City Council.

25. In connection with the proposal to co-locate Kwame Nkrumah Academy Elementary School with Walter Q. Gresham Elementary School, I sent notice to the following elected officials: Senator Emil Jones, III of

the 14th District of the Illinois Legislature, Senator Donne E. Trotter of the 17th District of the Illinois Legislature, Representative Monique D. Davis of the 27th District of the Illinois Legislature, Representative Elgie R. Sims, Jr. of the 34th District of the Illinois Legislature, Alderman Howard B. Brookins of the 21st Ward of the Chicago City Council, and Alderman Michelle Harris of the 8th Ward of the Chicago City Council.

26. In connection with the proposal to close Matthew A. Henson Elementary School, I sent notice to the following elected officials: Senator Patricia Van Pelt of the 5th District of the Illinois Legislature, Representative Arthur Turner of the 9th District of the Illinois Legislature, and Alderman Michael Chandler of the 24th Ward of the Chicago City Council.

27. In connection with the proposal to close Victor Herbert Elementary School and relocate Robert Nathaniel Dett Elementary School, I sent notice to the following elected officials: Senator Patricia Van Pelt of the 5th District of the Illinois Legislature, Representative Derrick Smith of the 10th District of the Illinois Legislature, and Alderman Robert Fioretti of the 2nd Ward of the Chicago City Council.

28. In connection with the proposal to co-locate a new KIPP Middle School campus with Hope College Preparatory High School, I sent notice to the following elected officials: Senator Mattie Hunter of the 3rd District of the Illinois Legislature, Representative Esther Golar of the 6th District of the Illinois Legislature, and Alderman Pat Dowell of the 3rd Ward of the Chicago City Council.

29. In connection with the proposal to close William J. & Charles H. Mayo Elementary School and relocate Ida B. Wells Preparatory Elementary Academy, I sent notice to the following elected officials: Senator Mattie Hunter of the 3rd District of the Illinois Legislature, Representative Kenneth Dunkin of the 5th District of the Illinois Legislature, and Alderman Pat Dowell of the 3rd Ward of the Chicago City Council.

30. In connection with the proposal to close Francis Scott Key Elementary School, I sent notice to the following elected officials: Senator Don Harmon of the 39th District of the Illinois Legislature, Senator Kimberly A. Lightford of the 4th District of the Illinois Legislature, Representative Camille Y. Lilly of the 78th District of the Illinois Legislature, Representative La Shawn K. Ford of the 8th District of the Illinois Legislature, and Alderman Deborah L. Graham of the 29th Ward of the Chicago City Council.

31. In connection with the proposal to close William H. King Elementary School, I sent notice to the following elected officials: Senator Patricia Van Pelt of the 5th District of the Illinois Legislature, Representative Arthur Turner of the 9th District of the Illinois Legislature, Alderman Robert Fioretti of the 2nd Ward of the Chicago City Council, and Alderman Jason C. Ervin of the 28th Ward of the Chicago City Council.

32. In connection with the proposal to close Alfred David Kohn Elementary School, I sent notice to the following elected officials: Senator Emil Jones, III of the 14th District of the Illinois Legislature, Representative Robert Rita of the 28th District of the Illinois Legislature, Alderman Carrie M. Austin of the 34th Ward of the Chicago City Council, and Alderman Anthony A. Beale of the 9th Ward of the Chicago City Council.

33. In connection with the proposal to close Jean D. Lafayette Elementary School, I sent notice to the following elected officials: Senator William Delgado of the 2nd District of the Illinois Legislature, Representative Cynthia Soto of the 4th District of the Illinois Legislature, and Alderman Proco (Joe) Moreno of the 1st Ward of the Chicago City Council.

34. In connection with the proposal to close Martin A. Ryerson Elementary School and relocate Laura S. Ward Elementary School, I sent notice to the following elected officials: Senator Patricia Van Pelt of the 5th District of the Illinois Legislature, Representative Derrick Smith of the 10th District of the Illinois Legislature, and Alderman Walter Burnett of the 27th Ward of the Chicago City Council.

35. In connection with the proposal to close Robert H. Lawrence Elementary School and relocate Burnham Elementary Inclusive Academy, I sent notice to the following elected officials: Senator Donne E. Trotter of the 17th District of the Illinois Legislature, Representative Marcus C. Evans of the 33rd District of the Illinois Legislature, and Alderman Natashia L. Holmes of the 7th Ward of the Chicago City Council.

36. In connection with the proposal to close Louis Armstrong Math & Science Elementary School and the relocate George Leland Elementary School, I sent notice to the following elected officials: Senator Kimberly A. Lightford of the 4th District of the Illinois Legislature, Representative La Shawn K. Ford of the 8th District of the Illinois Legislature, and Alderman Deborah L. Graham of the 29th Ward of the Chicago City Council.

37. In connection with the proposal to close Mahalia Jackson Elementary School, I sent notice to the following elected officials: Senator Emil Jones, III of the 14th District of the Illinois Legislature, Representative Monique D. Davis of the 27th District of the Illinois Legislature, and Alderman Howard B. Brookins of the 21st Ward of the Chicago City Council.

38. In connection with the proposal to close George Manierre Elementary School, I sent notice to the following elected officials: Senator Patricia Van Pelt of the 5th District of the Illinois Legislature, Representative Arthur Turner of the 9th District of the Illinois Legislature, and Alderman Walter Burnett of the 27th Ward of the Chicago City Council.

39. In connection with the proposal to close Guglielmo Marconi Elementary Community Academy, I sent notice to the following elected officials: Senator Patricia Van Pelt of the 5th District of the Illinois Legislature, Representative Derrick Smith of the 10th District of the Illinois Legislature, and Alderman Jason C. Ervin of the 28th Ward of the Chicago City Council.

40. In connection with the proposal to close Horatio May Elementary Community Academy and relocate George Leland Elementary School, I sent notice to the following elected officials: Senator Kimberly A. Lightford of the 4th District of the Illinois Legislature, Representative La Shawn K. Ford of the 8th District of the Illinois Legislature, and Alderman Deborah L. Graham of the 29th Ward of the Chicago City Council.

41. In connection with the proposal to co-locate The Montessori School of Englewood Charter with Luke O'Toole Elementary School, I sent notice to the following elected officials: Senator Jacqueline Y. Collins of the 16th District of the Illinois Legislature, Representative Andre M. Thapedi of the 32nd District of the Illinois Legislature, and Alderman Toni Foulkes of the 15th Ward of the Chicago City Council.

42. In connection with the proposal to close Garrett A. Morgan Elementary School, I sent notice to the following elected officials: Senator Emil Jones, III of the 14th District of the Illinois Legislature, Representative Monique D. Davis of the 27th District of the Illinois Legislature, and Alderman Howard B. Brookins of the 21st Ward of the Chicago City Council.

43. In connection with the proposal to close Near North Elementary School, I sent notice to the following elected officials: Senator William Delgado of the 2nd District of the Illinois Legislature, Senator Patricia Van Pelt of the 5th District of the Illinois Legislature, Representative Cynthia Soto of the 4th District of the Illinois Legislature, Representative Arthur Turner of the 9th District of the Illinois Legislature, Alderman Walter Burnett of the 27th Ward of the Chicago City Council, and Alderman Robert Fioretti of the 2nd Ward of the Chicago City Council.

44. In connection with the proposal to co-locate Noble Street Charter – Gary Comer College Prep with Paul Revere Elementary School, I sent notice to the following elected officials: Senator Mattie Hunter of the 3rd District of the Illinois Legislature, Representative Kenneth Dunkin of the 5th District of the Illinois Legislature, and Alderman Leslie A. Hairston of the 5th Ward of the Chicago City Council.

45. In connection with the proposal to close Anthony Overton Elementary School, I sent notice to the following elected officials: Senator Mattie Hunter of the 3rd District of the Illinois Legislature, Representative Kenneth Dunkin of the 5th District of the Illinois Legislature, and Alderman Pat Dowell of the 3rd Ward of the Chicago City Council.

46. In connection with the proposal to close Jesse Owens Elementary Community Academy, I sent notice to the following elected officials: Senator Napoleon Harris, III of the 15th District of the Illinois Legislature, Representative Thaddeus Jones of the 29th District of the Illinois Legislature, and Alderman Anthony A. Beale of the 9th Ward of the Chicago City Council.

47. In connection with the proposal to close Ignance Paderewski Elementary Learning Academy, I sent notice to the following elected officials: Senator Patricia Van Pelt of the 5th District of the Illinois Legislature, Senator Martin A. Sandoval of the 11th District of the Illinois Legislature, Senator Steven M. Landek of the 12th District of the Illinois Legislature, Representative Arthur Turner of the 9th District of the Illinois Legislature, Representative Silvana Tabares of the 21st District of the Illinois Legislature, Representative Elizabeth Hernandez of the 24th District of the Illinois Legislature, and Alderman Ricardo Munoz of the 22nd Ward of the Chicago City Council.

48. In connection with the proposal to close Francis Parkman Elementary School, I sent notice to the following elected officials: Senator Mattie Hunter of the 3rd District of the Illinois Legislature, Representative Esther Golar of the 6th District of the Illinois Legislature, Representative Kenneth Dunkin of the 5th District of the Illinois Legislature, Alderman Pat Dowell of the 3rd Ward of the Chicago City Council, and Alderman Willie B. Cochran of the 20th Ward of the Chicago City Council.

49. In connection with the proposal to close Elizabeth Peabody Elementary School, I sent notice to the following elected officials: Senator William Delgado of the 2nd District of the Illinois Legislature, Representative Cynthia Soto of the 4th District of the Illinois Legislature, and Alderman Walter Burnett of the 27th Ward of the Chicago City Council.

50. In connection with the proposal to close Pershing West Middle School and Relocate John J. Pershing Elementary Humanities Magnet, I sent notice to the following elected officials: Senator Mattie Hunter of the 3rd District of the Illinois Legislature, Senator Kwame Raoul of the 13th District of the Illinois Legislature, Representative Kenneth Dunkin of the 5th District of the Illinois Legislature, Representative Christian L. Mitchell of the 26th District of the Illinois Legislature, Alderman Robert Fioretti of the 2nd Ward of the Chicago City Council, and Alderman William D. Burns of the 4th Ward of the Chicago City Council.

51. In connection with the proposal to close Nathaniel Pope Elementary School, I sent notice to the following elected officials: Senator Patricia Van Pelt of the 5th District of the Illinois Legislature, Representative Arthur Turner of the 9th District of the Illinois Legislature, and Alderman Michael Chandler of the 24th Ward of the Chicago City Council.

52. In connection with the proposal to close Betsy Ross Elementary School, I sent notice to the following elected officials: Senator Mattie Hunter of the 3rd District of the Illinois Legislature, Representative Kenneth Dunkin of the 5th District of the Illinois Legislature, and Alderman Willie B. Cochran of the 20th Ward of the Chicago City Council.

53. In connection with the proposal to close Austin O. Sexton Elementary School and Relocate John Fiske Elementary School, I sent notice to the following elected officials: Senator Mattie Hunter of the 3rd District of the Illinois Legislature, Senator Kwame Raoul of the 13th District of the Illinois Legislature, Representative Kenneth Dunkin of the 5th District of the Illinois Legislature, and Alderman Willie B. Cochran of the 20th Ward of the Chicago City Council.

54. In connection with the proposal to close Songhai Elementary Learning Institute, I sent notice to the following elected officials: Senator Emil Jones, III of the 14th District of the Illinois Legislature, Representative Robert Rita of the 28th District of the Illinois Legislature, Alderman Carrie M. Austin of the 34th Ward of the Chicago City Council, and Alderman Anthony A. Beale of the 9th Ward of the Chicago City Council.

55. In connection with the proposal to close Graeme Stewart Elementary School, I sent notice to the following elected officials: Senator Heather A. Steans of the 7th District of the Illinois Legislature, Senator John J. Cullerton of the 6th District of the Illinois Legislature, Representative Greg S. Harris of the 13th District of the Illinois Legislature, Representative Sara Feigenholtz of the 12th District of the Illinois Legislature and Alderman James Cappleman of the 46th Ward of the Chicago City Council.

56. In connection with the proposal to close Joseph Stockton Elementary School and relocate Mary E. Courtenay Elementary Language Arts Center, I sent notice to the following elected officials: Senator Heather A. Steans of the 7th District of the Illinois Legislature, Senator John J. Cullerton of the 6th District of the Illinois Legislature, Representative Greg S. Harris of the 13th District of the Illinois Legislature, Alderman James Cappleman of the 46th Ward of the Chicago City Council, and Alderman Ameya Pawar of the 47th Ward of the Chicago City Council.

57. In connection with the proposal to close Lyman Trumbull Elementary School, I sent notice to the following elected officials: Senator Heather A. Steans of the 7th District of the Illinois Legislature, Representative Greg S. Harris of the 13th District of the Illinois Legislature, Alderman Patrick O'Connor of the 40th Ward of the Chicago City Council, Alderman Harry Osterman of the 48th Ward of the Chicago City Council, and Alderman Ameya Pawar of the 47th Ward of the Chicago City Council.

58. In connection with the proposal to close Alexander von Humboldt Elementary School, I sent notice to the following elected officials: Senator William Delgado of the 2nd District of the Illinois Legislature, Representative Cynthia Soto of the 4th District of the Illinois Legislature, Alderman Roberto Maldonado of the 26th Ward of the Chicago City Council, and Alderman Proco (Joe) Moreno of the 1st Ward of the Chicago City Council.

59. In connection with the proposal to close West Pullman Elementary School, I sent notice to the following elected officials: Senator Emil Jones, III of the 14th District of the Illinois Legislature, Representative Robert Rita of the 28th District of the Illinois Legislature, and Alderman Carrie M. Austin of the 34th Ward of the Chicago City Council.

60. In connection with the proposals to close Williams Multiplex Elementary School and Williams Preparatory Academy Middle School and relocate John B. Drake Elementary School, I sent notice to the following elected officials: Senator Mattie Hunter of the 3rd District of the Illinois Legislature, Representative Esther Golar of the 6th District of the Illinois Legislature, Representative Kenneth Dunkin of the 5th District of the Illinois Legislature, Alderman Pat Dowell of the 3rd Ward of the Chicago City Council, and Alderman William D. Burns of the 4th Ward of the Chicago City Council.

61. In connection with the proposal to close Granville T. Woods Math & Science Academy Elementary School, I sent notice to the following elected officials: Senator Mattie Hunter of the 3rd District of the Illinois Legislature, Senator Jacqueline Y. Collins of the 16th District of the Illinois Legislature, Representative Esther Golar of the 6th District of the Illinois Legislature, Andre M. Thapedi of the 32nd District of the Illinois Legislature, Alderman JoAnn Thompson of the 16th Ward of the Chicago City Council, and Alderman Latasha R. Thomas of the 17th Ward of the Chicago City Council.

62. In connection with the proposal to close Elihu Yale Elementary School, I sent notice to the following elected officials: Senator Jacqueline Y. Collins of the 16th District of the Illinois Legislature, Representative Andre M. Thapedi of the 32nd District of the Illinois Legislature, Representative Mary E.

Flowers of the 31st District of the Illinois Legislature, Alderman Roderick T. Sawyer of the 6th Ward of the Chicago City Council, and Alderman Latasha R. Thomas of the 17th Ward of the Chicago City Council.

E. The following electronic mail messages were sent on March 22, 2013:

1. In connection with the proposal to co-locate John B. Drake Elementary School with Urban Prep Academy for Young Men – Bronzeville, I sent notice to the following elected officials: Senator Mattie Hunter of the 3rd District of the Illinois Legislature, Representative Esther Golar of the 6th District of the Illinois Legislature, Representative Kenneth Dunkin of the 5th District of the Illinois Legislature, Alderman Pat Dowell of the 3rd Ward of the Chicago City Council, and Alderman William D. Burns of the 4th Ward of the Chicago City Council.

2. In connection with the proposal to close John P. Altgeld Elementary School and relocate Daniel S. Wentworth Elementary School, I sent revised notice to the following elected officials: Senator Jacqueline Y. Collins of the 16th District of the Illinois Legislature, Representative Andre M. Thapedi of the 32nd District of the Illinois Legislature, and Alderman Latasha R. Thomas of the 17th Ward of the Chicago City Council.

3. In connection with the proposal to close Elaine O. Goodlow Elementary Magnet School and relocate Charles W. Earle Elementary School, I sent revised notice to the following elected officials: Senator Mattie Hunter of the 3rd District of the Illinois Legislature, Representative Esther Golar of the 6th District of the Illinois Legislature, and Alderman Toni Foulkes of the 15th Ward of the Chicago City Council.

4. In connection with the proposal to close Jesse Owens Elementary Community Academy, I resent notice to Senator Napoleon Harris, III of the 15th District of the Illinois Legislature.

VERIFICATION BY CERTIFICATION

Under penalties as provided by law pursuant to Section 1-109 of the Illinois Code of Civil Procedure, the undersigned certifies that the statements set forth in this instrument are true and correct, except as to matters therein stated to be on information and belief and as to such matters the undersigned certifies as aforesaid that he verily believes the same to be true.

LEONARD LANGSTON

BOARD OF EDUCATION OF THE CITY OF CHICAGO

In The Matter Of:

PUBLIC HEARINGS ON THE PROPOSALS OF THE CHIEF EXECUTIVE OFFICER TO CLOSE, PHASE-OUT, AND CO-LOCATE SCHOOLS

AFFIDAVIT OF JASON VAN PATTEN

I, JASON VAN PATTEN, state as follows:

1. I am a resident of Illinois, of legal age, and competent to give testimony under oath. I have personal knowledge of the matters contained in this affidavit. If called to testify in the above-captioned proceeding, I would testify as to the matters stated in this affidavit.

2. I am currently employed as the Director of Web Services at the Chicago Board of Education.

3. On information and belief, copies of the List of Independent Hearing Officers for Hearings, compiled by the General Counsel, and the Draft Guidelines for School Actions, 2012-2013 School Year, for public comment, were published on the CPS website on October 31, 2012 at http://cps.edu/About_CPS/Policies_and_guidelines/Pages/qualityschools.aspx.

4. On information and belief, a copy of the final Guidelines for School Actions, 2012-2013 School Year, was published on the CPS website on November 30, 2012 at http://cps.edu/About_CPS/Policies_and_guidelines/Pages/2013GuidelinesforSchoolActions.aspx.

5. On information and belief, in connection with the recently announced proposals of the Chief Executive Officer to close, phase-out, and co-locate schools, copies of the notice letters addressed to parents or guardians, administrators, faculty, staff, Local School Council members, and board members for charter schools, and draft transition plans were published on the CPS website on March 21, 2013 at http://cps.edu/qualityschools/Pages/qualityschools.aspx. Notice letters and draft transition plans were published for the following proposals:
   a. Proposed Phase-Out and Closure of Crispus Attucks Elementary School
   b. Proposed Closure of Benjamin Banneker Elementary School and Relocation of Benjamin E. Mays Elementary Academy
   c. Proposed Co-Location of Belmont-Cragin Elementary School with Northwest Middle School
   d. Proposed Closure of Mary McLeod Bethune Elementary School
   e. Proposed Closure of Arna Wendell Bontemps Elementary School
   f. Proposed Co-Location of a new Noble Street Charter School campus with Bowen High School
   g. Proposed Closure of Kate S. Buckingham Special Education Center
   h. Proposed Closure of John Calhoun North Elementary School
   i. Proposed Closure of Miriam G. Canter Middle School
   j. Proposed Co-Location of Richard T. Crane Medical Preparatory High School with Chicago Talent Development High School and Richard T. Crane Technical Preparatory High School
   k. Proposed Co-Location of a new Noble Street Charter School campus with George H. Corliss High School
   l. Proposed Closure of Edward C. Delano Elementary School and Relocation of Genevieve Melody Elementary School
   m. Proposed Co-Location of Disney II Magnet School with Thurgood Marshall Middle School
   n. Proposed Co-Location of Mary Mapes Dodge Elementary Renaissance Academy with Morton School of Excellence

o. Proposed Co-Location of John B. Drake Elementary School with Urban Prep Academy for Young Men – Bronzeville
p. Proposed Closure of Dumas Technology Academy and Relocation of James Wadsworth Elementary School
q. Proposed Closure of Ana Roque de Duprey Elementary School
r. Proposed Closure of Robert Emmet Elementary School
s. Proposed Closure of Leif Ericson Elementary Scholastic Academy
t. Proposed Closure of Enrico Fermi Elementary School
u. Proposed Closure of Garfield Park Preparatory Academy Elementary School
v. Proposed Closure of Marcus Moziah Garvey Elementary School
w. Proposed Closure of Nathan R. Goldblatt Elementary School
x. Proposed Co-Location of Kwame Nkrumah Academy Elementary School with Walter Q. Gresham Elementary School
y. Proposed Closure of Matthew A. Henson Elementary School
z. Proposed Closure of Victor Herbert Elementary School and Relocation of Robert Nathaniel Dett Elementary School
aa. Proposed Co-Location of a new KIPP Middle School campus with Hope College Preparatory High School
bb. Proposed Closure of William J. & Charles H. Mayo Elementary School and Relocation of Ida B. Wells Preparatory Elementary Academy
cc. Proposed Closure of Francis Scott Key Elementary School
dd. Proposed Closure of William H. King Elementary School
ee. Proposed Closure of Alfred David Kohn Elementary School
ff. Proposed Closure of Jean D. Lafayette Elementary School
gg. Proposed Closure of Martin A. Ryerson Elementary School and Relocation of Laura S. Ward Elementary School
hh. Proposed Closure of Robert H. Lawrence Elementary School and Relocation of Burnham Elementary Inclusive Academy
ii. Proposed Closure of Louis Armstrong Math & Science Elementary School and the Relocation of George Leland Elementary School
jj. Proposed Closure of Mahalia Jackson Elementary School
kk. Proposed Closure of George Manierre Elementary School
ll. Proposed Closure of Guglielmo Marconi Elementary Community Academy
mm. Proposed Closure of Horatio May Elementary Community Academy and Relocation of George Leland Elementary School
nn. Proposed Co-Location of The Montessori School of Englewood Charter with Luke O'Toole Elementary School
oo. Proposed Closure of Garrett A. Morgan Elementary School
pp. Proposed Closure of Near North Elementary School
qq. Proposed Co-Location of Noble Street Charter – Gary Comer College Prep with Paul Revere Elementary School
rr. Proposed Closure of Anthony Overton Elementary School
ss. Proposed Closure of Jesse Owens Elementary Community Academy
tt. Proposed Closure of Ignance Paderewski Elementary Learning Academy
uu. Proposed Closure of Francis Parkman Elementary School
vv. Proposed Closure of Elizabeth Peabody Elementary School
ww. Proposed Closure of Pershing West Middle School and Relocation of John J. Pershing Elementary Humanities Magnet
xx. Proposed Closure of Nathaniel Pope Elementary School
yy. Proposed Closure of Betsy Ross Elementary School
zz. Proposed Closure of Austin O. Sexton Elementary School and Relocation of John Fiske Elementary School
aaa. Proposed Closure of Songhai Elementary Learning Institute
bbb. Proposed Closure of Graeme Stewart Elementary School

ccc. Proposed Closure of Joseph Stockton Elementary School and Relocation of Mary E. Courtenay Elementary Language Arts Center
ddd. Proposed Closure of Lyman Trumbull Elementary School
eee. Proposed Closure of Alexander von Humboldt Elementary School
fff. Proposed Closure of West Pullman Elementary School
ggg. Proposed Closure of Williams Multiplex Elementary School and Relocation of John B. Drake Elementary School
hhh. Proposed Closure of Williams Preparatory Academy Middle School and Relocation of John B. Drake Elementary School
iii. Proposed Closure of Granville T. Woods Math & Science Academy Elementary School
jjj. Proposed Closure of Elihu Yale Elementary School

6. On information and belief, in connection with the recently announced proposals of the Chief Executive Officer to close, phase-out, and co-locate schools, copies of the notice letters addressed to parents or guardians, administrators, faculty, staff, Local School Council members and draft transition plans were published on the CPS website on March 22, 2013 at http://cps.edu/qualityschools/Pages/qualityschools.aspx. Notice letters and draft transition plans were published for the following proposals:
   a. Proposed Closure of John P. Altgeld Elementary School and Relocation of Daniel S. Wentworth Elementary School
   b. Proposed Closure of Elaine O. Goodlow Elementary Magnet School and Relocation of Charles W. Earle Elementary School

7. On information and belief, in connection with the Chief Executive Officer's proposals, summaries of the April 6, 2013 community meetings detailed below were published on the CPS website on or before April 11, 2013 at http://cps.edu/qualityschools/pages/schools.aspx:
   a. Proposed Co-Location of Noble Street Charter – Gary Comer College Prep with Paul Revere Elementary School, Meeting at Kenwood Academy High School from 10:00am-12:00pm
   b. Proposed Closure of Louis Armstrong Math & Science Elementary School and the Relocation of George Leland Elementary School and Proposed Closure of Horatio May Elementary Community Academy and Relocation of George Leland Elementary School, Meeting at Austin Business and Entrepreneurship Academy High School from 10:00am-1:00pm
   c. Proposed Closure of Leif Ericson Elementary Scholastic Academy, Meeting at Manley Career Academy High School from 12:30pm-2:30pm
   d. Proposed Closure of William H. King Elementary School, Meeting at Whitney M. Young Magnet High School from 10:00am-12:00pm
   e. Proposed Closure of Garfield Park Preparatory Academy Elementary School, Meeting at Whitney M. Young Magnet High School from 12:30pm-2:30pm
   f. Proposed Co-Location of Richard T. Crane Medical Preparatory High School with Chicago Talent Development High School and Richard T. Crane Technical Preparatory High School, Meeting at Whitney M. Young Magnet High School from 3:00pm-5:00pm
   g. Proposed Co-Location of Belmont-Cragin Elementary School with Northwest Middle School, Meeting at Charles Allen Prosser Career Academy High School from 10:00am-12:00pm
   h. Proposed Co-Location of The Montessori School of Englewood Charter with Luke O'Toole Elementary School, Meeting at TEAM Englewood Community Academy High School from 10:00am-12:00pm
   i. Proposed Co-Location of a new KIPP Middle School campus with Hope College Preparatory High School, Meeting at TEAM Englewood Community Academy High School from 12:30pm-2:30pm
   j. Proposed Closure of Elihu Yale Elementary School, Meeting at TEAM Englewood Community Academy High School from 3:00pm-5:00pm
   k. Proposed Closure of Songhai Elementary Learning Institute, Meeting at John M. Harlan Community Academy High School from 10:00am-12:00pm
   l. Proposed Closure of Kate S. Buckingham Special Education Center, Meeting at John M. Harlan Community Academy High School from 12:30pm-2:30pm

m. Proposed Co-Location of Kwame Nkrumah Academy Elementary School with Walter Q. Gresham Elementary School, Meeting at John M. Harlan Community Academy High School from 3:00pm-5:00pm

8. On information and belief, in connection with the Chief Executive Officer's proposals, summaries of the April 8, 2013 community meetings detailed below were published on the CPS website on or before April 13, 2013 at http://cps.edu/qualityschools/pages/schools.aspx:
   a. Proposed Closure of Pershing West Middle School and Relocation of John J. Pershing Elementary Humanities Magnet, Meeting at Paul Laurence Dunbar Career Academy High School from 5:00pm-7:00pm
   b. Proposed Closure of Anthony Overton Elementary School, Meeting at Paul Laurence Dunbar Career Academy High School from 7:30pm-9:30pm
   c. Proposed Closure of Miriam G. Canter Middle School, Meeting at Kenwood Academy High School from 5:00pm-7:00pm
   d. Proposed Closure of Betsy Ross Elementary School, Meeting at Kenwood Academy High School from 7:30pm-9:30pm
   e. Proposed Closure of Martin A. Ryerson Elementary School and Relocation of Laura S. Ward Elementary School, Meeting at Al Raby High School from 5:00pm-7:00pm
   f. Proposed Co-Location of Mary Mapes Dodge Elementary Renaissance Academy with Morton School of Excellence, Meeting at Al Raby High School from 7:30pm-9:30pm
   g. Proposed Closure of Mary McLeod Bethune Elementary School, Meeting at Manley Career Academy High School from 5:00pm-7:00pm
   h. Proposed Closure of Matthew A. Henson Elementary School, Meeting at Manley Career Academy High School from 7:30pm-9:30pm
   i. Proposed Closure of Elizabeth Peabody Elementary School, Meeting at Roberto Clemente Community Academy High School from 5:00pm-7:00pm
   j. Proposed Closure of Jean D. Lafayette Elementary School, Meeting at Roberto Clemente Community Academy High School from 7:30pm-9:30pm
   k. Proposed Closure of Graeme Stewart Elementary School, Meeting at Roald Amundsen High School from 5:00pm-7:00pm
   l. Proposed Closure of Joseph Stockton Elementary School and Relocation of Mary E. Courtenay Elementary Language Arts Center, Meeting at Roald Amundsen High School from 7:30pm-9:30pm
   m. Proposed Closure of Mahalia Jackson Elementary School, Meeting at William Rainey Harper High School from 5:00pm-7:00pm
   n. Proposed Closure of Garrett A. Morgan Elementary School, Meeting at William Rainey Harper High School from 7:30pm-9:30pm
   o. Proposed Closure of Jesse Owens Elementary Community Academy, Meeting at John M. Harlan Community Academy High School from 5:00pm-7:00pm
   p. Proposed Closure of West Pullman Elementary School, Meeting at John M. Harlan Community Academy High School from 7:30pm-9:30pm

9. On information and belief, in connection with the Chief Executive Officer's proposals, summaries of the April 9, 2013 community meetings detailed below were published on the CPS website on or before April 14, 2013 at http://cps.edu/qualityschools/pages/schools.aspx:
   a. Proposed Closure of Francis Parkman Elementary School, Meeting at Paul Laurence Dunbar Career Academy High School from 5:00pm-7:00pm
   b. Proposed Phase-Out and Closure of Crispus Attucks Elementary School, Meeting at Paul Laurence Dunbar Career Academy High School from 7:30pm-9:30pm
   c. Proposed Closure of William J. & Charles H. Mayo Elementary School and Relocation of Ida B. Wells Preparatory Elementary Academy, Meeting at Kenwood Academy High School from 5:00pm-7:00pm
   d. Proposed Closure of Austin O. Sexton Elementary School and Relocation of John Fiske Elementary School, Meeting at Kenwood Academy High School from 7:30pm-9:30pm

e. Proposed Closure of John Calhoun North Elementary School, Meeting at Al Raby High School from 5:00pm-7:00pm
f. Proposed Closure of Guglielmo Marconi Elementary Community Academy, Meeting at Al Raby High School from 7:30pm-9:30pm
g. Proposed Closure of Nathaniel Pope Elementary School, Meeting at Manley Career Academy High School from 5:00pm-7:00pm
h. Proposed Closure of Ignance Paderewski Elementary Learning Academy, Meeting at Manley Career Academy High School from 7:30pm-9:30pm
i. Proposed Closure of Victor Herbert Elementary School and Relocation of Robert Nathaniel Dett Elementary School, Meeting at Whitney M. Young Magnet High School from 5:00pm-7:00pm
j. Proposed Closure of Alexander von Humboldt Elementary School and Proposed Closure of Ana Roque de Duprey Elementary School, meeting at Roberto Clemente Community Academy High School from 5:00pm-8:00pm
k. Proposed Closure of Lyman Trumbull Elementary School, Meeting at Roald Amundsen High School from 5:00pm-7:00pm
l. Proposed Closure of Granville T. Woods Math & Science Academy Elementary School, Meeting at William Rainey Harper High School from 5:00pm-7:00pm
m. Proposed Closure of Arna Wendell Bontemps Elementary School, Meeting at William Rainey Harper High School from 7:30pm-9:30pm
n. Proposed Closure of Alfred David Kohn Elementary School, Meeting at John M. Harlan Community Academy High School from 5:00pm-7:00pm
o. Proposed Closure of Marcus Moziah Garvey Elementary School, Meeting at John M. Harlan Community Academy High School from 7:30pm-9:30pm
p. Proposed Closure of Elaine O. Goodlow Elementary Magnet School and Relocation of Charles W. Earle Elementary School, Meeting at Robert Lindblom Math & Science Academy High School from 5:00pm-7:00pm

10. On information and belief, in connection with the Chief Executive Officer's proposals, summaries of the April 10, 2013 community meetings detailed below were published on the CPS website on or before April 15, 2013 at http://cps.edu/qualityschools/pages/schools.aspx:
a. Proposed Closure of Williams Multiplex Elementary School and Relocation of John B. Drake Elementary School, Proposed Closure of Williams Preparatory Academy Middle School and Relocation of John B. Drake Elementary School, and Proposed Co-Location of John B. Drake Elementary School with Urban Prep Academy for Young Men – Bronzeville, Meeting at Paul Laurence Dunbar Career Academy High School from 5:00pm-8:00pm
b. Proposed Closure of Dumas Technology Academy and Relocation of James Wadsworth Elementary School, Meeting at Kenwood Academy High School from 5:00pm-7:00pm
c. Proposed Closure of Enrico Fermi Elementary School, Meeting at Kenwood Academy High School from 7:30pm-9:30pm
d. Proposed Closure of Nathan R. Goldblatt Elementary School, Meeting at Al Raby High School from 5:00pm-7:00pm
e. Proposed Closure of Edward C. Delano Elementary School and Relocation of Genevieve Melody Elementary School, Meeting at Al Raby High School from 7:30pm-9:30pm
f. Proposed Closure of Francis Scott Key Elementary School, Meeting at Austin Business and Entrepreneurship Academy High School from 5:00pm-7:00pm
g. Proposed Closure of Robert Emmet Elementary School, Meeting at Austin Business and Entrepreneurship Academy High School from 7:30pm-9:30pm
h. Proposed Co-Location of Disney II Magnet School with Thurgood Marshall Middle School, Meeting at Carl Schurz High School from 5:00pm-7:00pm
i. Proposed Closure of George Manierre Elementary School, Meeting at Lincoln Park High School from 5:00pm-7:00pm
j. Proposed Closure of Near North Elementary School, Meeting at Lincoln Park High School from 7:30pm-9:30pm

k. Proposed Co-Location of a new Noble Street Charter School campus with George H. Corliss High School, Meeting at Chicago Vocational Career Academy High School from 5:00pm-7:00pm
l. Proposed Co-Location of a new Noble Street Charter School campus with Bowen High School, Meeting at Chicago Vocational Career Academy High School from 7:30pm-9:30pm
m. Proposed Closure of Benjamin Banneker Elementary School and Relocation of Benjamin E. Mays Elementary Academy, Meeting at William Rainey Harper High School from 5:00pm-7:00pm
n. Proposed Closure of John P. Altgeld Elementary School and Relocation of Daniel S. Wentworth Elementary School, Meeting at William Rainey Harper High School from 7:30pm-9:30pm
o. Proposed Closure of Robert H. Lawrence Elementary School and Relocation of Burnham Elementary Inclusive Academy, Meeting at John M. Harlan Community Academy High School from 5:00pm-7:00pm

11. On information and belief, in connection with the Chief Executive Officer's proposals, summaries of the April 11, 2013 community meetings detailed below were published on the CPS website on or before April 16, 2013 at http://cps.edu/qualityschools/pages/schools.aspx:
a. Proposed Co-Location of Noble Street Charter – Gary Comer College Prep with Paul Revere Elementary School, Meeting at Kenwood Academy High School from 5:00pm-7:00pm
b. Proposed Closure of Louis Armstrong Math & Science Elementary School and the Relocation of George Leland Elementary School and Proposed Closure of Horatio May Elementary Community Academy and Relocation of George Leland Elementary School, Meeting at Austin Business and Entrepreneurship Academy High School from 5:00pm-8:00pm
c. Proposed Closure of Mary McLeod Bethune Elementary School, Meeting at Manley Career Academy High School from 5:00pm-7:00pm
d. Proposed Closure of Matthew A. Henson Elementary School, Meeting at Manley Career Academy High School from 7:30pm-9:30pm
e. Proposed Closure of William H. King Elementary School, Meeting at Whitney M. Young Magnet High School from 5:00pm-7:00pm
f. Proposed Closure of Garfield Park Preparatory Academy Elementary School, Meeting at Whitney M. Young Magnet High School from 7:30pm-9:30pm
g. Proposed Co-Location of Belmont-Cragin Elementary School with Northwest Middle School, Meeting at Charles Allen Prosser Career Academy High School from 5:00pm-7:00pm
h. Proposed Closure of Graeme Stewart Elementary School, Meeting at Roald Amundsen High School from 5:00pm-7:00pm
i. Proposed Closure of Joseph Stockton Elementary School and Relocation of Mary E. Courtenay Elementary Language Arts Center, Meeting at Roald Amundsen High School from 7:30pm-9:30pm
j. Proposed Closure of Elaine O. Goodlow Elementary Magnet School and Relocation of Charles W. Earle Elementary School, Meeting at William Rainey Harper High School from 7:30pm-9:30pm
k. Proposed Closure of Jesse Owens Elementary Community Academy, Meeting at John M. Harlan Community Academy High School from 5:00pm-7:00pm
l. Proposed Closure of West Pullman Elementary School, Meeting at John M. Harlan Community Academy High School from 7:30pm-9:30pm

VERIFICATION BY CERTIFICATION

Under penalties as provided by law pursuant to Section 1-109 of the Illinois Code of Civil Procedure, the undersigned certifies that the statements set forth in this instrument are true and correct, except as to matters therein stated to be on information and belief and as to such matters the undersigned certifies as aforesaid that he verily believes the same to be true.

JASON VAN PATTEN

CLASSIFIEDS 312.321.2345

Public Hearings

action be approved the returning Bontemps students will be welcomed at Nicholson Technology Academy (Nicholson), located at 6006 South Peoria Street. Community meetings will be held on Tuesday, April 9, 2013 from7:30-9:30 and Saturday, April 13, 2013 from 12:30pm-2:30pm at William Rainey Harper High School, located at 6520 South Wood Street. A public hearing will be held on Thursday, April 18, 2013, from 8:00pm-10:00pm at the Central Office of the Board of Education of the City of Chicago, 125 South Clark Street, to receive public comment. The meetings and hearing will conclude at the designated end time or following the comments of the last person who has signed up to speak, whichever occurs first. The meetings and hearing will conclude at the designated end time or following the comments of the last person who has signed up to speak, whichever occurs first. Anyone wishing to speak at the community meetings and hearing must sign up beginning one hour before the designated start time and ending one hour after the start of the meeting or hearing at the designated location. 04/03/2013 534854

CHICAGO PUBLIC SCHOOLS NOTICE OF COMMUNITY MEETINGS AND PUBLIC HEARING ON THE PROPOSED CLOSING OF NEAR NORTH ELEMENTARY SCHOOL

NOTICE IS HEREBY GIVEN that two community meetings and one public hearing have been scheduled to receive public comment on the proposed closing of Near North Elementary School, located at 739 North Ada Street. Should this action be approved the returning Near North students will be welcomed at Moses Montefiore Special Elementary School (Montefiore), located at 1310 South Ashland. Community meetings will be held on Wednesday, April 10, 2013 from 7:30-9:30pm and Monday, April 15, 2013 from 7:30pm-9:30pm at Lincoln Park High School, located at 2001 North Orchard. A public hearing will be held on Tuesday, April 23, 2013, from 8:00pm-10:00pm at the Central Office of the Board of Education of the City of Chicago, 125 South Clark Street, to receive public comment. The meetings and hearing will conclude at the designated end time or following the comments of the last person who has signed up to speak, whichever occurs first. Anyone wishing to speak at the community meetings and hearing must sign up beginning one hour before the designated start time and ending one hour after the start of the meeting or hearing at the designated location. 04/03/2013 535232

CHICAGO PUBLIC SCHOOLS NOTICE OF COMMUNITY MEETINGS AND PUBLIC HEARING ON THE PROPOSED CLOSING OF JOHN CALHOUN NORTH ELEMENTARY SCHOOL

NOTICE IS HEREBY GIVEN that two community meetings and one public hearing have been scheduled to receive public comment on the proposed closing of John Calhoun North Elementary School, located at 2833 West Adams Street. Should this action be approved the returning Calhoun North students will be welcomed at Willa Cather Elementary School (Cather), located at 2908 West Washington Boulevard. Community meetings will be held on Tuesday, April 9, 2013 from 5:00-7:00pm and Saturday, April 13, 2013 from 10:00am-12:00pm at Al Raby High School, located at 3545 West Fulton Street. A public hearing will be held on Tuesday, April 16, 2013, from 5:30pm-7:30pm at the Central Office of the Board of Education of the City of Chicago, 125 South Clark Street, to receive public comment. The meetings and hearing will conclude at the designated end time or following the comments of the last person who has signed up to speak, whichever occurs first. The meetings and hearing will conclude at the designated end time or following the comments of the last person who has signed up to speak, whichever occurs first. Anyone wishing to speak at the community meetings and hearing must sign up beginning one hour before the designated start time and ending one hour after the start of the meeting or hearing at the designated location. 04/03/2013 534859

CHICAGO PUBLIC SCHOOLS NOTICE OF COMMUNITY MEETINGS AND PUBLIC HEARING ON THE PROPOSED CLOSING OF ELIZABETH PEABODY ELEMENTARY SCHOOL

NOTICE IS HEREBY GIVEN that two community meetings and one public hearing have been scheduled to receive public comment on the proposed closing of Elizabeth Peabody Elementary School, located at 1444 West Augusta Boulevard. Should this action be approved the returning Peabody students will be welcomed at James Otis Elementary School (Otis), located at 525 North Armour Street. Community meetings will be held on Monday, April 8, 2013 from 5:00pm-7:00pm and Friday, April 12, 2013 from 5:00pm-7:00pm at Roberto Clemente Community Academy High School, located at 1147 North Western Avenue. A public hearing will be held on Thursday, April 18, 2013, from 5:300pm-7:30pm at the Central Office of the Board of Education of the City of Chicago, 125 South Clark Street, to receive public comment. The meetings and hearing will conclude at the designated end time or following the comments of the last person who has signed up to speak, whichever occurs first. The meetings and hearing will conclude at the designated end time or following the comments of the last person who has signed up to speak, whichever occurs first. Anyone wishing to speak at the community meetings and hearing must sign up beginning one hour before the designated start time and ending one hour after the start of the meeting or hearing at the designated location. 04/03/2013 534807

CHICAGO PUBLIC SCHOOLS NOTICE OF COMMUNITY MEETINGS AND PUBLIC HEARING ON THE PROPOSED CLOSING OF PERSHING WEST MIDDLE SCHOOL AND RELOCATION OF JOHN J. PERSHING ELEMENTARY HUMANITIES MAGNET

NOTICE IS HEREBY GIVEN that two community meetings and one public hearing have been scheduled to receive public comment on the proposed closing Pershing West Middle School located at 3200 S. Calumet Ave. Should this action be approved, all returning Pershing Middle students will be welcomed at John J. Pershing Elementary Humanities Magnet (Pershing) located at 3113 S. Rhodes Ave., which will be relocated to the current Pershing Middle facility. Pershing will serve pre-kindergarten through 8th grades. All Pershing Middle students will continue to attend school at 3200 S. Calumet., welcomed by the Pershing administration, staff, and students. Community meetings will be held on Monday, April 8, 2013 from 5:00pm-7:00pm and Friday, April 12, 2013 from 5:00pm-7:00pm at Paul Laurence Dunbar Career Academy High School, located at 3000 S. King Drive. A public hearing will be held on Friday, April 19, 2013, from 5:30pm-7:30pm at the Central Office of the Board of Education of the City of Chicago, 125 South Clark Street, to receive public comment. The meetings and hearing will conclude at the designated end time or following the comments of the last person who has signed up to speak, whichever occurs first. Anyone wishing to speak at the community meetings and hearing must sign up beginning one hour before the designated start time and ending one hour after the start of the meeting or hearing at the designated location. 04/03/2013 534778

CHICAGO PUBLIC SCHOOLS NOTICE OF COMMUNITY MEETINGS AND PUBLIC HEARING ON THE PROPOSED CLOSING OF GARRETT A. MORGAN ELEMENTARY SCHOOL

NOTICE IS HEREBY GIVEN that two community meetings and one public hearing have been scheduled to receive public comment on the proposed closing of Garrett A. Morgan Elementary School, located at 8407 South Kerfoot Avenue. Should this action be approved the returning Morgan students will be welcomed at William H. Ryder Math and Science Specialty Elementary School (Ryder), located at 8716 South Wallace. Community meetings will be held on Monday, April 8, 2013 from 7:30-9:30pm and Friday, April 12, 2013 from 7:30pm-9:30pm at William Rainey Harper High School located at 6520 South Wood Street. A public hearing will be held on Monday, April 22, 2013, from 8:00pm-10:00pm at the Central Office of the Board of Education of the City of Chicago, 125 South Clark Street, to receive public comment. The meetings and hearing will conclude at the designated end time or following the comments of the last person who has signed up to speak, whichever occurs first. The meetings and hearing will conclude at the designated end time or following the comments of the last person who has signed up to speak, whichever occurs first. Anyone wishing to speak at the community meetings and hearing must sign up beginning one hour before the designated start time and ending one hour after the start of the meeting or hearing at the designated location. 04/03/2013 534796

CHICAGO PUBLIC SCHOOLS NOTICE OF COMMUNITY MEETINGS AND PUBLIC HEARING ON THE PROPOSED CLOSING OF MARTIN A. RYERSON ELEMENTARY SCHOOL AND RELOCATION OF LAURA S. WARD ELEMENTARY SCHOOL

NOTICE IS HEREBY GIVEN that two community meetings and one public hearing have been scheduled to receive public comment on the proposed closing Martin A. Ryerson Elementary School located at 646 N. Lawndale Ave. Should this action be approved, all Ryerson Students will be welcomed by Laura S. Ward Elementary School located at 410 N, Monticello Ave., which will be relocated to the current Ryerson facility located at 646 N. Lawndale Ave. Thus, all Ryerson students will continue to attend school at 646 N. Lawndale Ave., welcomed by the Ward administration, staff and students. Community meetings will be held on Monday, April 8, 2013 from 5:00pm-7:00pm and Friday, April 12, 2013 from 5:00pm-7:00pm at Al Raby High School, located at 3545 W. Fulton Blvd. A public hearing will be held on Monday, April 29, 2013, from 5:30pm-7:30pm at the Central Office of the Board of Education of the City of Chicago, 125 South Clark Street, to receive public comment. The meetings and hearing will conclude at the designated end time or following the comments of the last person who has signed up to speak, whichever occurs first. Anyone wishing to speak at the community meetings and hearing must sign up beginning one hour before the designated start time and ending one hour after the start of the meeting or hearing at the designated location. 04/03/2013 534783

CHICAGO PUBLIC SCHOOLS NOTICE OF COMMUNITY MEETINGS AND PUBLIC HEARING ON THE PROPOSED CLOSING OF AUSTIN O. SEXTON ELEMENTARY SCHOOL AND RELOCATION OF JOHN FISKE ELEMENTARY SCHOOL

NOTICE IS HEREBY GIVEN that two community meetings and one public hearing have been scheduled to receive public comment on the proposed closing of Austin O. Sexton Elementary School at 6020 S. Langley Ave. Should this action be approved, all Sexton students will be welcomed by John Fiske Elementary School located at 6145 S. Ingleside Ave., which will be relocated to the current Sexton facility. Thus, all Sexton students will continue to attend school at 6020 S. Langley., welcomed by the Fiske administration, staff and students. Community meetings will be held on Tuesday, April 9, 2013 from 7:30pm-9:30pm and Saturday, April 13, 2013 from 12:30pm-2:30pm at Kenwood Academy High School, located at 5015 South Blackstone Ave. A public hearing will be held on Monday, April 22, 2013 from 8:00pm-10:00pm at the Central Office of the Board of Education of the City of Chicago, 125 South Clark Street, to receive public comment. The meetings and hearing will conclude at the designated end time or following the comments of the last person who has signed up to speak, whichever occurs first. Anyone wishing to speak at the community meetings and hearing must sign up beginning one hour before the designated start time and ending one hour after the start of the meeting or hearing at the designated location. 04/03/2013 534852

CHICAGO PUBLIC SCHOOLS NOTICE OF COMMUNITY MEETINGS AND PUBLIC HEARING ON THE PROPOSED CLOSING OF FRANCIS PARKMAN ELEMENTARY SCHOOL

NOTICE IS HEREBY GIVEN that two community meetings and one public hearing have been scheduled to receive public comment on the proposed closing of Francis Parkman Elementary School, located at 245 West 51 Street. Should this action be approved the returning Parkman students will be welcomed at Jesse Sherwood Elementary School (Sherwood), located at 245 West 57th Street. Community meetings will be held on Tuesday, April 9, 2013 from 5:00-7:00pm and Saturday, April 13, 2013 from 10:00am-12:00pm at Paul Laurence Dunbar Academy High School, located at 3000 South King Drive. A public hearing will be held on Friday, April 19, 2013, from 8:00pm-10:00pm at the Central Office of the Board of Education of the City of Chicago, 125 South Clark Street, to receive public comment. The meetings and hearing will conclude at the designated end time or following the comments of the last person who has signed up to speak, whichever occurs first. The meetings and hearing will conclude at the designated end time or following the comments of the last person who has signed up to speak, whichever occurs first. Anyone wishing to speak at the community meetings and hearing must sign up beginning one hour before the designated start time and ending one hour after the start of the meeting or hearing at the designated location. 04/03/2013 534876

CHICAGO PUBLIC SCHOOLS NOTICE OF COMMUNITY MEETINGS AND PUBLIC HEARING ON THE PROPOSED CLOSING OF JOSEPH STOCKTON ELEMENTARY SCHOOL AND RELOCATION OF MARY E. COURTENAY ELEMENTARY LANGUAGE ARTS CENTER

NOTICE IS HEREBY GIVEN that two community meetings and one public hearing have been scheduled to receive public comment on the proposed closing Joseph Stockton Elementary School located at 4420 N. Beacon St. Should this action be approved, all Stockton Students will be welcomed by Mary E. Courtenay Elementary Language Arts Center located at 1726 W. Berteau Ave., which will be relocated to the current Stockton facility located at 4420 N. Beacon St. Thus, all Stockton students will continue to attend school at 4420 N. Beacon St. and will be welcomed by the Courtenay administration, staff and students. Community meetings will be held on Monday, April 8, 2013 from 7:30pm-9:30pm and Thursday, April 11, 2013 from 7:30pm-9:30pm at Roald Amundsen High School, located at 5110 N. Damen Avenue. A public hearing will be held on Tuesday, April 16, 2013, from 8:00pm-10:00pm at the Central Office of the Board of Education of the City of Chicago, 125 South Clark Street, to receive public comment. The meetings and hearing will conclude at the designated end time or following the comments of the last person who has signed up to speak, whichever occurs first. Anyone wishing to speak at the community meetings and hearing must sign up beginning one hour before the designated start time and ending one hour after the start of the meeting or hearing at the designated location. 04/03/2013 534786

TO PLACE YOUR GARAGE SALE AD IN THE CHICAGO SUN-TIMES, CALL 312-321-2345

Formerly cited as IL ST CH 122 ¶ 34-18

Effective: July 13, 2012

West's Smith-Hurd Illinois Compiled Statutes Annotated Currentness
Chapter 105. Schools (Refs & Annos)
Common Schools
Act 5. School Code (Refs & Annos)
Article 34. Cities of Over 500,000 Inhabitants--Board of Education (Refs & Annos)
5/34-18. Powers of the board

§ 34-18. Powers of the board. The board shall exercise general supervision and jurisdiction over the public education and the public school system of the city, and, except as otherwise provided by this Article, shall have power:

1. To make suitable provision for the establishment and maintenance throughout the year or for such portion thereof as it may direct, not less than 9 months, of schools of all grades and kinds, including normal schools, high schools, night schools, schools for defectives and delinquents, parental and truant schools, schools for the blind, the deaf and the physically disabled, schools or classes in manual training, constructural and vocational teaching, domestic arts and physical culture, vocation and extension schools and lecture courses, and all other educational courses and facilities, including establishing, equipping, maintaining and operating playgrounds and recreational programs, when such programs are conducted in, adjacent to, or connected with any public school under the general supervision and jurisdiction of the board; provided that the calendar for the school term and any changes must be submitted to and approved by the State Board of Education before the calendar or changes may take effect, and provided that in allocating funds from year to year for the operation of all attendance centers within the district, the board shall ensure that supplemental general State aid funds are allocated and applied in accordance with Section 18-8 or 18-8.05. To admit to such schools without charge foreign exchange students who are participants in an organized exchange student program which is authorized by the board. The board shall permit all students to enroll in apprenticeship programs in trade schools operated by the board, whether those programs are union-sponsored or not. No student shall be refused admission into or be excluded from any course of instruction offered in the common schools by reason of that student's sex. No student shall be denied equal access to physical education and interscholastic athletic programs supported from school district funds or denied participation in comparable physical education and athletic programs solely by reason of the student's sex. Equal access to programs supported from school district funds and comparable programs will be defined in rules promulgated by the State Board of Education in consultation with the Illinois High School Association. Notwithstanding any other provision of this Article, neither the board of education nor any local school council or other school official shall recommend that children with disabilities be placed into regular education classrooms unless those children with disabilities are provided with supplementary services to assist them so that they benefit from the regular classroom instruction and are included on the teacher's regular education class register;

2. To furnish lunches to pupils, to make a reasonable charge therefor, and to use school funds for the payment of such expenses as the board may determine are necessary in conducting the school lunch program;

3. To co-operate with the circuit court;

4. To make arrangements with the public or quasi-public libraries and museums for the use of their facilities by

© 2013 Thomson Reuters. No Claim to Orig. US Gov. Works.

teachers and pupils of the public schools;

5. To employ dentists and prescribe their duties for the purpose of treating the pupils in the schools, but accepting such treatment shall be optional with parents or guardians;

6. To grant the use of assembly halls and classrooms when not otherwise needed, including light, heat, and attendants, for free public lectures, concerts, and other educational and social interests, free of charge, under such provisions and control as the principal of the affected attendance center may prescribe;

7. To apportion the pupils to the several schools; provided that no pupil shall be excluded from or segregated in any such school on account of his color, race, sex, or nationality. The board shall take into consideration the prevention of segregation and the elimination of separation of children in public schools because of color, race, sex, or nationality. Except that children may be committed to or attend parental and social adjustment schools established and maintained either for boys or girls only. All records pertaining to the creation, alteration or revision of attendance areas shall be open to the public. Nothing herein shall limit the board's authority to establish multi-area attendance centers or other student assignment systems for desegregation purposes or otherwise, and to apportion the pupils to the several schools. Furthermore, beginning in school year 1994-95, pursuant to a board plan adopted by October 1, 1993, the board shall offer, commencing on a phased-in basis, the opportunity for families within the school district to apply for enrollment of their children in any attendance center within the school district which does not have selective admission requirements approved by the board. The appropriate geographical area in which such open enrollment may be exercised shall be determined by the board of education. Such children may be admitted to any such attendance center on a space available basis after all children residing within such attendance center's area have been accommodated. If the number of applicants from outside the attendance area exceed the space available, then successful applicants shall be selected by lottery. The board of education's open enrollment plan must include provisions that allow low income students to have access to transportation needed to exercise school choice. Open enrollment shall be in compliance with the provisions of the Consent Decree and Desegregation Plan cited in Section 34-1.01;

8. To approve programs and policies for providing transportation services to students. Nothing herein shall be construed to permit or empower the State Board of Education to order, mandate, or require busing or other transportation of pupils for the purpose of achieving racial balance in any school;

9. Subject to the limitations in this Article, to establish and approve system-wide curriculum objectives and standards, including graduation standards, which reflect the multi-cultural diversity in the city and are consistent with State law, provided that for all purposes of this Article courses or proficiency in American Sign Language shall be deemed to constitute courses or proficiency in a foreign language; and to employ principals and teachers, appointed as provided in this Article, and fix their compensation. The board shall prepare such reports related to minimal competency testing as may be requested by the State Board of Education, and in addition shall monitor and approve special education and bilingual education programs and policies within the district to assure that appropriate services are provided in accordance with applicable State and federal laws to children requiring services and education in those areas;

10. To employ non-teaching personnel or utilize volunteer personnel for: (i) non-teaching duties not requiring instructional judgment or evaluation of pupils, including library duties; and (ii) supervising study halls, long distance teaching reception areas used incident to instructional programs transmitted by electronic media such as computers, video, and audio, detention and discipline areas, and school-sponsored extracurricular activities. The board may further utilize volunteer non-certificated personnel or employ non-certificated personnel to assist in the instruction of pupils under the immediate supervision of a teacher holding a valid certificate, directly engaged in teaching subject matter or conducting activities; provided that the teacher shall be continuously aware of the non-certificated persons' activities and shall be able to control or modify them. The general superintendent shall determine qualifications of such personnel and shall prescribe rules for determining the duties and activities to be as-

© 2013 Thomson Reuters. No Claim to Orig. US Gov. Works.

signed to such personnel;

10.5. To utilize volunteer personnel from a regional School Crisis Assistance Team (S.C.A.T.), created as part of the Safe to Learn Program established pursuant to Section 25 of the Illinois Violence Prevention Act of 1995, [FN1] to provide assistance to schools in times of violence or other traumatic incidents within a school community by providing crisis intervention services to lessen the effects of emotional trauma on individuals and the community; the School Crisis Assistance Team Steering Committee shall determine the qualifications for volunteers;

11. To provide television studio facilities in not to exceed one school building and to provide programs for educational purposes, provided, however, that the board shall not construct, acquire, operate, or maintain a television transmitter; to grant the use of its studio facilities to a licensed television station located in the school district; and to maintain and operate not to exceed one school radio transmitting station and provide programs for educational purposes;

12. To offer, if deemed appropriate, outdoor education courses, including field trips within the State of Illinois, or adjacent states, and to use school educational funds for the expense of the said outdoor educational programs, whether within the school district or not;

13. During that period of the calendar year not embraced within the regular school term, to provide and conduct courses in subject matters normally embraced in the program of the schools during the regular school term and to give regular school credit for satisfactory completion by the student of such courses as may be approved for credit by the State Board of Education;

14. To insure against any loss or liability of the board, the former School Board Nominating Commission, Local School Councils, the Chicago Schools Academic Accountability Council, or the former Subdistrict Councils or of any member, officer, agent or employee thereof, resulting from alleged violations of civil rights arising from incidents occurring on or after September 5, 1967 or from the wrongful or negligent act or omission of any such person whether occurring within or without the school premises, provided the officer, agent or employee was, at the time of the alleged violation of civil rights or wrongful act or omission, acting within the scope of his employment or under direction of the board, the former School Board Nominating Commission, the Chicago Schools Academic Accountability Council, Local School Councils, or the former Subdistrict Councils; and to provide for or participate in insurance plans for its officers and employees, including but not limited to retirement annuities, medical, surgical and hospitalization benefits in such types and amounts as may be determined by the board; provided, however, that the board shall contract for such insurance only with an insurance company authorized to do business in this State. Such insurance may include provision for employees who rely on treatment by prayer or spiritual means alone for healing, in accordance with the tenets and practice of a recognized religious denomination;

15. To contract with the corporate authorities of any municipality or the county board of any county, as the case may be, to provide for the regulation of traffic in parking areas of property used for school purposes, in such manner as is provided by Section 11-209 of The Illinois Vehicle Code, approved September 29, 1969, [FN2] as amended;

16. (a) To provide, on an equal basis, access to a high school campus and student directory information to the official recruiting representatives of the armed forces of Illinois and the United States for the purposes of informing students of the educational and career opportunities available in the military if the board has provided such access to persons or groups whose purpose is to acquaint students with educational or occupational opportunities available to them. The board is not required to give greater notice regarding the right of access to recruiting representatives than is given to other persons and groups. In this paragraph 16, "directory information" means a high school student's name, address, and telephone number.

© 2013 Thomson Reuters. No Claim to Orig. US Gov. Works.

(b) If a student or his or her parent or guardian submits a signed, written request to the high school before the end of the student's sophomore year (or if the student is a transfer student, by another time set by the high school) that indicates that the student or his or her parent or guardian does not want the student's directory information to be provided to official recruiting representatives under subsection (a) of this Section, the high school may not provide access to the student's directory information to these recruiting representatives. The high school shall notify its students and their parents or guardians of the provisions of this subsection (b).

(c) A high school may require official recruiting representatives of the armed forces of Illinois and the United States to pay a fee for copying and mailing a student's directory information in an amount that is not more than the actual costs incurred by the high school.

(d) Information received by an official recruiting representative under this Section may be used only to provide information to students concerning educational and career opportunities available in the military and may not be released to a person who is not involved in recruiting students for the armed forces of Illinois or the United States;

17. (a) To sell or market any computer program developed by an employee of the school district, provided that such employee developed the computer program as a direct result of his or her duties with the school district or through the utilization of the school district resources or facilities. The employee who developed the computer program shall be entitled to share in the proceeds of such sale or marketing of the computer program. The distribution of such proceeds between the employee and the school district shall be as agreed upon by the employee and the school district, except that neither the employee nor the school district may receive more than 90% of such proceeds. The negotiation for an employee who is represented by an exclusive bargaining representative may be conducted by such bargaining representative at the employee's request.

(b) For the purpose of this paragraph 17:

(1) "Computer" means an internally programmed, general purpose digital device capable of automatically accepting data, processing data and supplying the results of the operation.

(2) "Computer program" means a series of coded instructions or statements in a form acceptable to a computer, which causes the computer to process data in order to achieve a certain result.

(3) "Proceeds" means profits derived from marketing or sale of a product after deducting the expenses of developing and marketing such product;

18. To delegate to the general superintendent of schools, by resolution, the authority to approve contracts and expenditures in amounts of $10,000 or less;

19. Upon the written request of an employee, to withhold from the compensation of that employee any dues, payments or contributions payable by such employee to any labor organization as defined in the Illinois Educational Labor Relations Act. [FN3] Under such arrangement, an amount shall be withheld from each regular payroll period which is equal to the pro rata share of the annual dues plus any payments or contributions, and the board shall transmit such withholdings to the specified labor organization within 10 working days from the time of the withholding;

19a. Upon receipt of notice from the comptroller of a municipality with a population of 500,000 or more, a county with a population of 3,000,000 or more, the Cook County Forest Preserve District, the Chicago Park District, the Metropolitan Water Reclamation District, the Chicago Transit Authority, or a housing authority of a municipality with a population of 500,000 or more that a debt is due and owing the municipality, the county, the Cook County Forest Preserve District, the Chicago Park District, the Metropolitan Water Reclamation District, the Chicago

© 2013 Thomson Reuters. No Claim to Orig. US Gov. Works.

Transit Authority, or the housing authority by an employee of the Chicago Board of Education, to withhold, from the compensation of that employee, the amount of the debt that is due and owing and pay the amount withheld to the municipality, the county, the Cook County Forest Preserve District, the Chicago Park District, the Metropolitan Water Reclamation District, the Chicago Transit Authority, or the housing authority; provided, however, that the amount deducted from any one salary or wage payment shall not exceed 25% of the net amount of the payment. Before the Board deducts any amount from any salary or wage of an employee under this paragraph, the municipality, the county, the Cook County Forest Preserve District, the Chicago Park District, the Metropolitan Water Reclamation District, the Chicago Transit Authority, or the housing authority shall certify that (i) the employee has been afforded an opportunity for a hearing to dispute the debt that is due and owing the municipality, the county, the Cook County Forest Preserve District, the Chicago Park District, the Metropolitan Water Reclamation District, the Chicago Transit Authority, or the housing authority and (ii) the employee has received notice of a wage deduction order and has been afforded an opportunity for a hearing to object to the order. For purposes of this paragraph, "net amount" means that part of the salary or wage payment remaining after the deduction of any amounts required by law to be deducted and "debt due and owing" means (i) a specified sum of money owed to the municipality, the county, the Cook County Forest Preserve District, the Chicago Park District, the Metropolitan Water Reclamation District, the Chicago Transit Authority, or the housing authority for services, work, or goods, after the period granted for payment has expired, or (ii) a specified sum of money owed to the municipality, the county, the Cook County Forest Preserve District, the Chicago Park District, the Metropolitan Water Reclamation District, the Chicago Transit Authority, or the housing authority pursuant to a court order or order of an administrative hearing officer after the exhaustion of, or the failure to exhaust, judicial review;

20. The board is encouraged to employ a sufficient number of certified school counselors to maintain a student/counselor ratio of 250 to 1 by July 1, 1990. Each counselor shall spend at least 75% of his work time in direct contact with students and shall maintain a record of such time;

21. To make available to students vocational and career counseling and to establish 5 special career counseling days for students and parents. On these days representatives of local businesses and industries shall be invited to the school campus and shall inform students of career opportunities available to them in the various businesses and industries. Special consideration shall be given to counseling minority students as to career opportunities available to them in various fields. For the purposes of this paragraph, minority student means a person who is any of the following:

(a) American Indian or Alaska Native (a person having origins in any of the original peoples of North and South America, including Central America, and who maintains tribal affiliation or community attachment).

(b) Asian (a person having origins in any of the original peoples of the Far East, Southeast Asia, or the Indian subcontinent, including, but not limited to, Cambodia, China, India, Japan, Korea, Malaysia, Pakistan, the Philippine Islands, Thailand, and Vietnam).

(c) Black or African American (a person having origins in any of the black racial groups of Africa). Terms such as "Haitian" or "Negro" can be used in addition to "Black or African American".

(d) Hispanic or Latino (a person of Cuban, Mexican, Puerto Rican, South or Central American, or other Spanish culture or origin, regardless of race).

(e) Native Hawaiian or Other Pacific Islander (a person having origins in any of the original peoples of Hawaii, Guam, Samoa, or other Pacific Islands).

Counseling days shall not be in lieu of regular school days;

© 2013 Thomson Reuters. No Claim to Orig. US Gov. Works.

22. To report to the State Board of Education the annual student dropout rate and number of students who graduate from, transfer from or otherwise leave bilingual programs;

23. Except as otherwise provided in the Abused and Neglected Child Reporting Act [FN4] or other applicable State or federal law, to permit school officials to withhold, from any person, information on the whereabouts of any child removed from school premises when the child has been taken into protective custody as a victim of suspected child abuse. School officials shall direct such person to the Department of Children and Family Services, or to the local law enforcement agency if appropriate;

24. To develop a policy, based on the current state of existing school facilities, projected enrollment and efficient utilization of available resources, for capital improvement of schools and school buildings within the district, addressing in that policy both the relative priority for major repairs, renovations and additions to school facilities, and the advisability or necessity of building new school facilities or closing existing schools to meet current or projected demographic patterns within the district;

25. To make available to the students in every high school attendance center the ability to take all courses necessary to comply with the Board of Higher Education's college entrance criteria effective in 1993;

26. To encourage mid-career changes into the teaching profession, whereby qualified professionals become certified teachers, by allowing credit for professional employment in related fields when determining point of entry on teacher pay scale;

27. To provide or contract out training programs for administrative personnel and principals with revised or expanded duties pursuant to this Act in order to assure they have the knowledge and skills to perform their duties;

28. To establish a fund for the prioritized special needs programs, and to allocate such funds and other lump sum amounts to each attendance center in a manner consistent with the provisions of part 4 of Section 34-2.3. Nothing in this paragraph shall be construed to require any additional appropriations of State funds for this purpose;

29. (Blank);

30. Notwithstanding any other provision of this Act or any other law to the contrary, to contract with third parties for services otherwise performed by employees, including those in a bargaining unit, and to layoff those employees upon 14 days written notice to the affected employees. Those contracts may be for a period not to exceed 5 years and may be awarded on a system-wide basis. The board may not operate more than 30 contract schools, provided that the board may operate an additional 5 contract turnaround schools pursuant to item (5.5) of subsection (d) of Section 34-8.3 of this Code;

31. To promulgate rules establishing procedures governing the layoff or reduction in force of employees and the recall of such employees, including, but not limited to, criteria for such layoffs, reductions in force or recall rights of such employees and the weight to be given to any particular criterion. Such criteria shall take into account factors including, but not be limited to, qualifications, certifications, experience, performance ratings or evaluations, and any other factors relating to an employee's job performance;

32. To develop a policy to prevent nepotism in the hiring of personnel or the selection of contractors;

33. To enter into a partnership agreement, as required by Section 34-3.5 of this Code, and, notwithstanding any other provision of law to the contrary, to promulgate policies, enter into contracts, and take any other action necessary to accomplish the objectives and implement the requirements of that agreement; and

© 2013 Thomson Reuters. No Claim to Orig. US Gov. Works.

34. To establish a Labor Management Council to the board comprised of representatives of the board, the chief executive officer, and those labor organizations that are the exclusive representatives of employees of the board and to promulgate policies and procedures for the operation of the Council.

The specifications of the powers herein granted are not to be construed as exclusive but the board shall also exercise all other powers that they may be requisite or proper for the maintenance and the development of a public school system, not inconsistent with the other provisions of this Article or provisions of this Code which apply to all school districts.

In addition to the powers herein granted and authorized to be exercised by the board, it shall be the duty of the board to review or to direct independent reviews of special education expenditures and services. The board shall file a report of such review with the General Assembly on or before May 1, 1990.

CREDIT(S)

Laws 1961, p. 31, § 34-18, eff. July 1, 1961. Amended by Laws 1961, p. 500, § 1, eff. July 1, 1961; Laws 1963, p. 1107, § 1, eff. July 1, 1963; Laws 1963, p. 3264, § 1, eff. Aug. 21, 1963; Laws 1965, p. 1604, § 1, eff. July 15, 1965; Laws 1967, p. 395, § 1, eff. July 1, 1967; Laws 1967, p. 3304, § 1, eff. Aug. 21, 1967; Laws 1968, p. 430, § 1, eff. July 1, 1969; P.A. 76-1481, § 1, eff. Sept. 22, 1969; P.A. 77-717, § 1, eff. Aug. 12, 1971; P.A. 77-1187, § 1, eff. Aug. 19, 1971; P.A. 77-2829, § 60, eff. Dec. 22, 1972; P.A. 78-255, § 61, eff. Oct. 1, 1973; P.A. 78-881, § 1, eff. Oct. 1, 1973; P.A. 78-1297, § 58, eff. March 4, 1975; P.A. 79-597, § 1, eff. Oct. 1, 1975; P.A. 79-693, § 1, eff. Oct. 1, 1975; P.A. 79-791, § 1, eff. Sept. 5, 1975; P.A. 79-1366, § 49, eff. Oct. 1, 1976; P.A. 79-1454, § 60, eff. Aug. 31, 1976; P.A. 80-1412, § 1, eff. Aug. 31, 1978; P.A. 80-1495, § 53, eff. Jan. 8, 1979; P.A. 81-1508, § 13, eff. Sept. 25, 1980; P.A. 82-161, § 1, eff. Jan. 1, 1982; P.A. 82-543, § 1, eff. Sept. 16, 1981; P.A. 82-783, Art. III, § 64, eff. July 13, 1982; P.A. 83-797, § 1, eff. Sept. 24, 1983; P.A. 83-1014, § 22, eff. Jan. 1, 1984; P.A. 83-1362, Art. II, § 153, eff. Sept. 11, 1984; P.A. 84-662, § 1, eff. Sept. 20, 1985; P.A. 84-663, § 1, eff. Sept. 20, 1985; P.A. 84-1308, Art. II, § 172, eff. Aug. 25, 1986; P.A. 85-238, § 1, eff. Jan. 1, 1988; P.A. 85-410, § 1, eff. Jan. 1, 1988; P.A. 85-1209, Art. II, § 2-96, eff. Aug. 30, 1988; P.A. 85-1418, § 1, eff. May 1, 1989; P.A. 85-1440, Art. II, § 2-54, eff. Feb. 1, 1989; P.A. 86-124, § 1, eff. July 28, 1989; P.A. 86-623, § 1, eff. Jan. 1, 1990; P.A. 86-1002, § 2, eff. July 1, 1990; P.A. 86-1028, Art. II, § 2-83, eff. Feb. 5, 1990. Reenacted by P.A. 86-1477, § 2, eff. Jan. 11, 1991. Amended by P.A. 87-455, § 1, eff. Sept. 11, 1991; P.A. 88-89, Art. 2, § 2-5, eff. July 14, 1994; P.A. 88-511, § 45, eff. Nov. 14, 1993; P.A. 88-686, § 5, eff. Jan. 24, 1995; P.A. 89-15, § 5, eff. May 30, 1995; P.A. 89-397, § 5, eff. Aug. 20, 1995; P.A. 89-626, Art. 2, § 2-36, eff. Aug. 9, 1996; P.A. 90-22, § 15, eff. June 20, 1997; P.A. 90-548, 1st Sp.Sess., Art. 5, § 5-915, eff. Jan. 1, 1998; P.A. 92-109, § 23, eff. July 20, 2001; P.A. 92-527, § 5, eff. June 1, 2002; P.A. 92-724, § 5, eff. July 25, 2002; P.A. 93-3, § 5, eff. April 16, 2003; P.A. 93-1036, § 90, eff. Sept. 14, 2004; P.A. 96-105, § 5, eff. July 30, 2009; P.A. 97-227, § 60, eff. Jan. 1, 2012; P.A. 97-396, § 40, eff. Jan. 1, 2012; P.A. 97-813, § 230, eff. July 13, 2012.

Formerly Ill.Rev.Stat.1991, ch. 122, ¶ 34-18.

[FN1] 20 ILCS 4027/25 (Repealed)

[FN2] 625 ILCS 5/11-209

[FN3] 115 ILCS 5/1 et. seq.

[FN4] 325 ILCS 5/1 et. seq.

HISTORICAL AND STATUTORY NOTES

© 2013 Thomson Reuters. No Claim to Orig. US Gov. Works.

Formerly cited as IL ST CH 122 ¶ 34-18

Section 2 of P.A. 77-717, provided:

"If any provision of this amendatory Act or the application thereof to any person or circumstance is held invalid, the invalidity does not affect other provisions or applications of this amendatory Act which can be given effect without the invalid provision or application, and to this end the provisions of this amendatory Act are severable."

Section 90 of P.A. 96-105, provided:

"Section 90. The non-State agency parties that engaged in the negotiation of this Act shall, within 30 days after the effective date of this Act, enter into a memorandum of understanding, which shall include without limitation language whereby, through June 30, 2013, and subject to any legislative changes required by federal law, such parties shall not propose any changes to Article 27A of the School Code other than legislation to establish an independent, State-level, charter school authorizing entity".

P.A. 97-813, the First 2012 General Revisory Act, amended various Acts to delete obsolete text, to correct patent and technical errors, to revise cross references, to resolve multiple actions in the 96th and 97th General Assemblies and to make certain technical corrections in P.A. 96-1480 through P.A. 97-625.

Source. Laws 1909, p. 342, §§ 136, 137, 139; Laws 1917, p. 723, § 1; Laws 1929, p. 704, § 1; Laws 1931-32, 1st Sp.Sess., p. 128, § 1; Laws 1935, p. 1331, § 1; S.H.A., ch. 122, ¶¶ 159, 160, 162.

Laws 1945, p. 1331, § 34-17; Laws 1951, p. 501, § 1; Laws 1953, p. 1033, § 1; Laws 1955, p. 1186, § 1; Laws 1955, p. 2055, § 1; Laws 1957, p. 2863, § 1; Laws 1961, p. 1947, § 1; S.H.A. ch. 122, ¶ 34-17.

Prior Laws:

Laws 1909, p. 342, § 97.

Laws 1935, p. 1392, § 1.

Laws 1945, p. 1331, § 27-16.

Laws 1949, p. 1446, § 1.

CROSS REFERENCES

Alternative schools, Chicago public schools, contracts for services, see 105 ILCS 5/13A-11.
Areas of education, see 105 ILCS 5/27-1.
Certification of teachers, see 105 ILCS 5/21-1b et seq.
Courses of study, control by superintendent, see 105 ILCS 5/34-8.
Lunch programs, equipment, see 105 ILCS 5/10-22.26.
Power of school board to contract for educational television, see 105 ILCS 5/10-22.30.

LAW REVIEW AND JOURNAL COMMENTARIES

Access to government information. 68 Nw.U.L.Rev. 363 (1973).

© 2013 Thomson Reuters. No Claim to Orig. US Gov. Works.

All wired up: An analysis of the FCC's order to internally connect schools. 50 Fed.Comm.L.J. 215. (1997).

Collective bargaining power of school board employees. 33 U.Chi.L.Rev. 852 (1966).

Current issues in Illinois school law: The consumer's perspective. Patrick A. Keenan, 23 DePaul L.Rev. 402 (1973).

Equal education opportunity for Negroes: Abstraction or reality. Robert L. Carter, 1968 U.Ill.L.F. 160.

Integrity, accountability, and efficiency: Using disclosure to fight the appearance of nepotism in school board contracting. 94 Nw.U.L.Rev. 657 (2000).

Kids surfing the Net at school: What are the legal issues? 24 Rutgers Computer & Tech.L.J. 417 (1998).

Liability of local governments and their employees in Illinois. 58 Ill.B.J. 620 (1970).

Privacy regulation of computer-assisted testing and instruction. 63 Wash.L.Rev. 841 (1988).

Responding to students' pleas for relief: The need for a consistent approach to peer sexual harassment claims. 17 N.Ill.U.L.Rev. 479 (1997).

School desegregation: De facto and de jure segregation. 18 DePaul L.Rev. 305 (1968).

Teacher negotiations. 1973 U.Ill.L.F. 307.

Universal service in the schools: One step too far? 50 Fed.Comm.L.J. 237 (1997).

When the free-market visits public schools: Answering the roll call for disadvantaged students. 15 Nat'l Black L.J. 26 (1997-1998).

With all deliberate speed. 1968 U.Ill.L.F. 105.

LIBRARY REFERENCES

Schools⚷ 55.
Westlaw Topic No. 345.
C.J.S. Schools and School Districts §§ 149 to 150, 191 to 194, 196 to 199, 310, 372, 507, 570.

RESEARCH REFERENCES

ALR Library

127 ALR 1298, Teachers' Tenure Statutes.

Encyclopedias

Am. Jur. 2d Schools § 82, Other Court Remedies.

Illinois Law and Practice Schools § 194, Dismissal or Other Adverse Action.

© 2013 Thomson Reuters. No Claim to Orig. US Gov. Works.

Illinois Law and Practice Schools § 218, Curriculum, Grades, and Textbooks.

UNITED STATES SUPREME COURT

Establishment clause, federally funded materials and equipment loaned to the public and private schools, direct aid to parochial schools, neutral availability, see People v. Brewer, 2000, 711 N.Y.S.2d 161, 95 N.Y.2d 793, 733 N.E.2d 233, 2000 WL 826371, Unreported.

NOTES OF DECISIONS

Budget 6
Bus contracts 8
Constitutional issues 1
Curriculum 10
Delegation of powers 4
Desegregation plans 15
Discipline of students 12
Employment contracts 7
Fraternities or sororities 17
Lay-offs 18
Legislative intent 2
Maintenance and development of schools 5
Nature and scope of powers 3
Racial discrimination 14
Religious instruction 16
School property, use of 13
Subdistricts 9
Termination 19
Textbooks 11

1. Constitutional issues

Act which removed from nonteacher school employees' unions their exclusive bargaining power with school district did not violate contract clause by impairing union constitutions and bylaws, assuming that constitutions and bylaws constituted contracts between unions and employees for purposes of contract clause analysis; although act substantially impaired contractual obligation by removing unions as employees' exclusive bargaining agent, such impairment was rationally related to legitimate interest of eliminating inefficiency and waste in school system. Bricklayers Union Local 21 v. Edgar, N.D. Ill.1996, 922 F.Supp. 100. Constitutional Law 2664; Constitutional Law 2671; Constitutional Law 2751; Labor And Employment 1154

Act that removed unions' exclusive bargaining power with school district as to nonteacher employees did not violate equal protection guarantees since, in distinguishing certificated from noncertificated employees, and third parties contracting with state from unions, act did not discriminate against similarly situated individuals, and, even if equal protection clause did apply, act was rationally related to legitimate goal of bringing financial stability to system. Bricklayers Union Local 21 v. Edgar, N.D. Ill.1996, 922 F.Supp. 100. Constitutional Law 3599; Labor And Employment 1154

Act that removed from nonteacher school employees' unions their exclusive bargaining power with school district did not violate employees' substantive due process rights; eliminating civil service status of nonteachers in order to

© 2013 Thomson Reuters. No Claim to Orig. US Gov. Works.

avoid expensive hearings was rationally related to legitimate purpose of improving efficiency of school system. Bricklayers Union Local 21 v. Edgar, N.D. Ill.1996, 922 F.Supp. 100. Constitutional Law 4184; Labor And Employment 1154

Although nonteacher school employees had property interest in continued employment absent cause based on state law that conferred civil service status on union employees, they were not deprived of such interest without due process by act that removed unions' exclusive bargaining power with school district; legislative process created all procedural safeguards necessary to provide employees with due process. Bricklayers Union Local 21 v. Edgar, N.D. Ill.1996, 922 F.Supp. 100. Constitutional Law 4184; Constitutional Law 4185

Nonteacher school employees had no property rights to continued employment absent cause based in contract, for purposes of determining whether act that removed unions' exclusive bargaining power with school district violated employees' procedural due process rights; although employees had had property rights in collective bargaining agreements, those property rights ended when collective bargaining agreements expired. Bricklayers Union Local 21 v. Edgar, N.D. Ill.1996, 922 F.Supp. 100. Constitutional Law 4184; Labor And Employment 1302

Section of School Code governing school board's power to promulgate layoff procedures and recall procedures did not provide laid-off tenured teachers with any procedural rights during rehiring process following economic layoff; section merely provided board with authority to promulgate such procedures as it saw fit, but section contained no mandatory language. Chicago Teachers Union, Local No. 1 v. Board of Educ. of City of Chicago, 2012, 357 Ill.Dec. 520, 963 N.E.2d 918, answer to certified question conformed to 476 Fed.Appx. 83, 2012 WL 1355610. Schools 147.48

2. Legislative intent

Specific powers granted by legislature to board of education are not intended to exclude others requisite and proper to the development of a public school system, so long as exercise of assertedly requisite and proper power is not inconsistent with the code that governs school administration. Board of Ed. of City of Chicago v. Chicago Teachers Union, Local 1, Am. Federation of Teachers, App. 1 Dist.1975, 26 Ill.App.3d 806, 326 N.E.2d 158. Schools 55

3. Nature and scope of powers

Under Illinois law, school board has final policymaking authority regarding decisions to hire and fire teachers, for purposes of determining whether there was action by persons with that authority, for purposes of finding entity liable for civil rights violations under §§ 1983. Bogosian v. Board of Educ. of Community Unit School Dist. 200, N.D. Ill.2001, 134 F.Supp.2d 952. Civil Rights 1351(5)

Power vested in a school board and its superintendent by the school code is not absolute. Stasica v. Hannon, App. 1 Dist.1979, 27 Ill.Dec. 147, 70 Ill.App.3d 785, 388 N.E.2d 1110. Schools 55

The Board of Education of the City of Chicago is a body politic and corporate, created to carry out certain governmental functions in connection with the education of children of the School District of Chicago, and has only such powers as are expressly conferred upon it by the Legislature or such as may be necessary to carry into effect granted powers. Rosenheim, First Securities Co. of Chicago, Intervener v. City of Chicago, App.1956, 12 Ill.App.2d 382, 139 N.E.2d 856. Schools 55

A board of education can exercise no greater power than the legislature can confer upon it. Adams v. Brenan, 1898, 52 N.E. 314, 177 Ill. 194, 69 Am.St.Rep. 222. Schools 55

© 2013 Thomson Reuters. No Claim to Orig. US Gov. Works.

Chicago Board of Education, like all municipal bodies has only such powers as are expressly given to it, or as result by fair implication from powers granted by statute giving board power to furnish schools with necessary fixtures, furniture and apparatus to maintain schools, and supply funds for salaries from school taxes, etc. Harris v. Kill, 1903, 108 Ill.App. 305.

4. Delegation of powers

Powers of a school board to control budgetary considerations and to set earlier closing dates are discretionary unto itself and may not be delegated. Board of Ed. of City of Chicago v. Chicago Teachers Union, Local 1, 1981, 58 Ill.Dec. 860, 88 Ill.2d 63, 430 N.E.2d 1111. Schools 162.1

Board of Education of City of Chicago did not improperly delegate its discretionary power to fix salaries of teachers when it entered into collective bargaining agreement and adopted specific annual salaries set forth therein and also adopted a budget. Board of Ed. of City of Chicago v. Chicago Teachers Union, Local No. 1, 1981, 56 Ill.Dec. 653, 86 Ill.2d 469, 427 N.E.2d 1199.

Authority of board of education to contract for teachers' services is a discretionary power that cannot be delegated, through collective bargaining agreement or otherwise, to third party such as an arbitrator. Board of Ed. of City of Chicago v. Chicago Teachers Union, Local 1, American Federation of Teachers, App. 1 Dist.1980, 45 Ill.Dec. 236, 89 Ill.App.3d 861, 412 N.E.2d 587, reversed on other grounds 58 Ill.Dec. 860, 88 Ill.2d 63, 430 N.E.2d 1111. Labor And Employment 1542; Schools 55

5. Maintenance and development of schools

Power of board of education of city of Chicago to control and manage schools and to adopt rules and regulations necessary for that purpose as authorized by Const. 1870, Art. 8, § 1, and legislation adopted pursuant thereto, is ample and full, and exercise of discretion by board in determining what rules and by-laws are necessary to proper conduct and management of schools will not be interfered with or set aside by courts, in absence of clear abuse of power and discretion conferred. Favorite v. Board of Education of Chicago, 1908, 235 Ill. 314, 85 N.E. 402; Wilson v. Board of Education of Chicago, 1908, 233 Ill. 464, 84 N.E. 697, 13 Ann.Cas. 330.

Acquisition of funds for operation of school system is proper for maintenance and fullest development of an efficient school system. Loeb v. Board of Ed. of City of Chicago, N.D. Ill.1952, 103 F.Supp. 876, reversed on other grounds 203 F.2d 775. Schools 17

Under ¶ 162 of former chapter 122, incorporated in § 34-17, School Code of 1945, providing that a board of education shall exercise all powers that may be requisite or proper for maintenance and fullest development of an efficient public school system, Board of Education of Chicago was empowered to issue tax anticipation warrants. Loeb v. Board of Ed. of City of Chicago, N.D. Ill.1952, 103 F.Supp. 876, reversed on other grounds 203 F.2d 775. Schools 95(1)

This paragraph, that permits school board to exercise powers requisite or proper for maintenance and development of public school system, authorized board to make whatever provisions were necessary for appointment of district supervising engineer in compliance with civil service law, and, thus, inapplicability of city personnel code to school board and abolition of civil service commission did not make it legally impossible to make appointments in compliance with civil service law. Local 143 Intern. Union of Operating Engineers v. Board of Educ. of City of Chicago, App. 1 Dist.1987, 108 Ill.Dec. 816, 156 Ill.App.3d 431, 509 N.E.2d 512, appeal denied 113 Ill.Dec. 301, 116 Ill.2d 560, 515 N.E.2d 110. Officers And Public Employees 11.1

© 2013 Thomson Reuters. No Claim to Orig. US Gov. Works.

Employment of personnel to operate and maintain physical plants of school buildings is necessary for proper maintenance and development of school system within meaning of this paragraph, that permits school board to exercise powers requisite or proper for maintenance and development of public school system. Local 143 Intern. Union of Operating Engineers v. Board of Educ. of City of Chicago, App. 1 Dist.1987, 108 Ill.Dec. 816, 156 Ill.App.3d 431, 509 N.E.2d 512, appeal denied 113 Ill.Dec. 301, 116 Ill.2d 560, 515 N.E.2d 110. Schools 63(1)

6. Budget

School board had discretionary power under the School Code to control budgetary considerations and to set a closing date earlier than that set on the annual calendar so long as the minimum number of days had been met. Board of Ed. of City of Chicago v. Chicago Teachers Union, Local 1, 1981, 58 Ill.Dec. 860, 88 Ill.2d 63, 430 N.E.2d 1111. Schools 162.1

Not only is Board of Education of City of Chicago obligated by law to honor its contracts as would an individual, but it must practice sound management in planning its budget and in entering into contract and that duty necessitates setting duration of school year within financial limitations of the Board, entailing financial predictions by Board in setting of its school calendar and in contract drafting. Board of Ed. of City of Chicago v. Chicago Teachers Union, Local 1, American Federation of Teachers, App. 1 Dist.1980, 45 Ill.Dec. 236, 89 Ill.App.3d 861, 412 N.E.2d 587, reversed on other grounds 58 Ill.Dec. 860, 88 Ill.2d 63, 430 N.E.2d 1111. Schools 80(1)

In light of a huge accumulated deficit and a reduction in anticipated revenue from both state aid and local property taxes, action of school board in closing schools one day early pursuant to its statutory authority, on a day when students were scheduled for only two hours, was neither arbitrary, discriminatory, nor unreasonable. Board of Ed. of City of Chicago v. Chicago Teachers Union, Local 1, American Federation of Teachers, App. 1 Dist.1980, 45 Ill.Dec. 236, 89 Ill.App.3d 861, 412 N.E.2d 587, reversed on other grounds 58 Ill.Dec. 860, 88 Ill.2d 63, 430 N.E.2d 1111.

Collective bargaining agreement requirement that salary schedules for teachers be subject to terms of appropriations contained in school budgets did not subject agreement to budget provision that no employee had right to continuous employment if it became necessary to lay him off for lack of funds and, once board made appropriation in budget, thereby implementing salary provisions of the agreement, board's contractual obligation to provide annual salaries was fixed. Board of Ed. of City of Chicago v. Chicago Teachers Union, Local 1, American Federation of Teachers, App. 1 Dist.1980, 45 Ill.Dec. 236, 89 Ill.App.3d 861, 412 N.E.2d 587, reversed on other grounds 58 Ill.Dec. 860, 88 Ill.2d 63, 430 N.E.2d 1111. Labor And Employment 1279

7. Employment contracts

Act which removed from nonteacher school employees' unions their exclusive bargaining power with school district did not violate contract clause by impairing union constitutions and bylaws, assuming that constitutions and bylaws constituted contracts between unions and employees for purposes of contract clause analysis; although act substantially impaired contractual obligation by removing unions as employees' exclusive bargaining agent, such impairment was rationally related to legitimate interest of eliminating inefficiency and waste in school system. Bricklayers Union Local 21 v. Edgar, N.D. Ill.1996, 922 F.Supp. 100. Constitutional Law 2664; Constitutional Law 2671; Constitutional Law 2751; Labor And Employment 1154

Nonteacher school employees had no property rights to continued employment absent cause based in contract, for purposes of determining whether act that removed unions' exclusive bargaining power with school district violated employees' procedural due process rights; although employees had had property rights in collective bargaining agreements, those property rights ended when collective bargaining agreements expired. Bricklayers Union Local 21 v. Edgar, N.D. Ill.1996, 922 F.Supp. 100. Constitutional Law 4184; Labor And Employment 1302

© 2013 Thomson Reuters. No Claim to Orig. US Gov. Works.

Although nonteacher school employees had property interest in continued employment absent cause based on state law that conferred civil service status on union employees, they were not deprived of such interest without due process by act that removed unions' exclusive bargaining power with school district; legislative process created all procedural safeguards necessary to provide employees with due process. Bricklayers Union Local 21 v. Edgar, N.D. Ill.1996, 922 F.Supp. 100. Constitutional Law 4184; Constitutional Law 4185

Act that removed from nonteacher school employees' unions their exclusive bargaining power with school district did not violate employees' substantive due process rights; eliminating civil service status of nonteachers in order to avoid expensive hearings was rationally related to legitimate purpose of improving efficiency of school system. Bricklayers Union Local 21 v. Edgar, N.D. Ill.1996, 922 F.Supp. 100. Constitutional Law 4184; Labor And Employment 1154

Act that removed unions' exclusive bargaining power with school district as to nonteacher employees did not violate equal protection guarantees since, in distinguishing certificated from noncertificated employees, and third parties contracting with state from unions, act did not discriminate against similarly situated individuals, and, even if equal protection clause did apply, act was rationally related to legitimate goal of bringing financial stability to system. Bricklayers Union Local 21 v. Edgar, N.D. Ill.1996, 922 F.Supp. 100. Constitutional Law 3599; Labor And Employment 1154

8. Bus contracts

School board's two percent local business preference for bus contracts had no proper legislative authority and was unconstitutionally arbitrary and capricious delegation of power to municipal unit. Best Bus Joint Venture v. Board of Educ. of City of Chicago, App. 1 Dist.1997, 224 Ill.Dec. 255, 288 Ill.App.3d 770, 681 N.E.2d 570. Constitutional Law 2437; Public Contracts 129

9. Subdistricts

A suit in mandamus to compel admission of colored children to certain school on ground that subdistricts established by board of education had been gerrymandered for racial reasons, was properly dismissed, where evidence showed no gerrymandering or racial discrimination. People ex rel. Warfield v. Board of Education of City of Chicago, App.1944, 55 N.E.2d 297, 323 Ill.App. 294. Mandamus 168(4)

10. Curriculum

Under this paragraph, Chicago School Board has power to create and maintain experimental education programs for Chicago public school children so long as methods so adopted are otherwise consistent with provisions of school code. Morton v. Board of Ed. of City of Chicago, App.1966, 69 Ill.App.2d 38, 216 N.E.2d 305. Schools 55

11. Textbooks

A resolution of the board of education of the city of Chicago, providing for free text-books for children of the first four grades of the elementary schools, was illegal and unauthorized, and enjoined at the petition of a taxpayer. Harris v. Kill, 1903, 108 Ill.App. 305.

12. Discipline of students

Even though student was not regularly employed, this paragraph and other paragraphs of School Code were not

© 2013 Thomson Reuters. No Claim to Orig. US Gov. Works.

shown to prevent school board from transferring her to continuation school as disciplinary measure in case where her conduct could have been visited with suspension or expulsion. Betts v. Board of Ed. of City of Chicago, C.A.7 (Ill.)1972, 466 F.2d 629. Schools 169

13. School property, use of

Contracts involving the rental of school lands vitally affect the public interest and are to be construed liberally in favor of the public. Board of Ed. of City of Chicago v. Crilly, App.1941, 37 N.E.2d 873, 312 Ill.App. 16. Schools 65

14. Racial discrimination

Allegation, in complaint by school board and superintendent, that effect of statutory reduction in state aid was to discriminate against relatively poorer school districts such as Chicago merited consideration, but board did not have standing to protest alleged racial discrimination inasmuch as board was not member of the protected class of pupils, nor was superintendent of the board in any better position. Cronin v. Lindberg, 1976, 4 Ill.Dec. 424, 66 Ill.2d 47, 360 N.E.2d 360. Schools 114

Discrimination on account of color by establishing separate schools not allowed. People ex rel. Bibb v. Mayor of City of Alton, 1901, 61 N.E. 1077, 193 Ill. 309.

The free schools in the state are public institutions, and in their management and control the law contemplates that they should be so managed that all the children within the district, regardless of race or color, shall have equal and the same rights to participate in the benefits to be derived therefrom. Chase v. Stephenson, 1874, 71 Ill. 383. Schools 151

15. Desegregation plans

School desegregation decree would be terminated since consequences of segregation had been eliminated; there was no showing that unequal educational attainment was due to school board's past illegalities rather than other factors such as poverty, parents' education and employment, family size, parental attitudes and behavior, prenatal, neonatal, and child health care, peer-group pressures, and ethnic culture, and no showing that minority students were enrolling in advanced classes at a lower rate than white students because of school segregation. People Who Care v. Rockford Bd. of Educ., School Dist. 205, C.A.7 (Ill.)2001, 246 F.3d 1073, rehearing and rehearing en banc denied , on remand 2001 WL 755306. Schools 13(20)

Article 10, § 2 of the 1970 Constitution which grants Board of Education authority to establish goals, determine policies, and provide for planning and evaluating education programs did not authorize Board to enact rules relating to desegregation where legislature placed duty to prevent segregation in hands of local school boards. Aurora East Public School Dist. No. 131 v. Cronin, 1982, 66 Ill.Dec. 85, 92 Ill.2d 313, 442 N.E.2d 511. Schools 13(8)

Though prospect of white flight and consequent resegregation could not justify failure to comply with a court decree ordering integration, where it was evident that voluntary action of school board was motivated by a good-faith effort to stabilize enrollments at high schools and to promote integration not only at those schools but also at alternative high schools designated under the segregation plans, racial quotas imposed were not intended to retard integration and to create racial imbalance at subject high schools. Aurora East Public School Dist. No. 131 v. Cronin, 1982, 66 Ill.Dec. 85, 92 Ill.2d 313, 442 N.E.2d 511.

Provision of the Illinois School Code investing the board of education with sufficient discretionary authority to

© 2013 Thomson Reuters. No Claim to Orig. US Gov. Works.

achieve the prevention of segregation and the elimination of separation of children in public schools because of color, race, sex or nationality must not be read as foreclosing the board from restricting the racial composition of the enrollment at a school within a particular attendance area where such a remedial measure achieves the prevention of de facto segregation in the public schools. Aurora East Public School Dist. No. 131 v. Cronin, 1982, 66 Ill.Dec. 85, 92 Ill.2d 313, 442 N.E.2d 511.

Student racial stabilization code instituted by board of education at high schools in district to prevent de facto racial segregation were statutorily and constitutionally permissible where, prior to implementation of plans, attendance areas for schools were rapidly changing in residential occupancy from white to black and trend in enrollments was toward segregated student bodies, whereas plans successfully arrested trend so that all high school students living in those attendance areas were provided with a meaningful and viable opportunity to attend an integrated high school. Aurora East Public School Dist. No. 131 v. Cronin, 1982, 66 Ill.Dec. 85, 92 Ill.2d 313, 442 N.E.2d 511.

16. Religious instruction

Pupils cannot be compelled to join in religious worship. Reading Bible barred. People ex rel. Ring v. Board of Education of Dist. 24, 1910, 92 N.E. 251, 245 Ill. 334, 19 Am.Ann.Cas. 220.

The reading of the Bible, singing of hymns, and repeating of the Lord's Prayer in a public school constitutes the giving of sectarian instruction and was forbidden by the Constitution of the State. People ex rel. Ring v. Board of Education of Dist. 24, 1910, 92 N.E. 251, 245 Ill. 334, 19 Am.Ann.Cas. 220.

Mandamus against the board of directors of a school district is a proper method to compel the board to refrain from conducting religious exercises in the public schools. People ex rel. Ring v. Board of Education of Dist. 24, 1910, 92 N.E. 251, 245 Ill. 334, 19 Am.Ann.Cas. 220.

17. Fraternities or sororities

"Anti fraternity rule" of Board of Education of city of Chicago was valid exercise of board's power. Favorite v. Board of Education of Chicago, 1908, 85 N.E. 402, 235 Ill. 314.

Rule adopted by board of education of city of Chicago on recommendation of superintendent of schools after thorough investigation, requiring teachers to refuse public recognition to secret fraternities and sororities, to refuse to permit their meetings in school buildings, to allow name of school to be used by such organizations, and to refuse to allow any member of such societies to represent schools in any literary or athletic contest, or in any public capacity, and to inform parents of pupils that such societies were condemned, but not withdrawing from pupils who were members thereof any public school privileges, was neither unlawful nor unreasonable. Wilson v. Board of Education of Chicago, 1908, 84 N.E. 697, 233 Ill. 464, 13 Am.Ann.Cas. 330. Schools 172

18. Lay-offs

Section of School Code governing school board's power to promulgate layoff procedures and recall procedures did not provide laid-off tenured teachers with a substantive right to be rehired after an economic layoff; section was plainly an authorizing or enabling provision and did not contain any mandatory terms, and the legislature intended merely to confer a power which the board could exercise or not, as it saw fit, accordingly, section could not be the basis of a substantive right to be rehired after an economic layoff. Chicago Teachers Union, Local No. 1 v. Board of Educ. of City of Chicago, 2012, 357 Ill.Dec. 520, 963 N.E.2d 918, answer to certified question conformed to 476 Fed.Appx. 83, 2012 WL 1355610. Schools 147.48

© 2013 Thomson Reuters. No Claim to Orig. US Gov. Works.

Genuine issue of material fact as to whether school board properly delegated responsibility for making any or all of the determinations required by its policy in laying off tenured public school teachers and, if so, whether the party to whom authority was delegated acted in accordance with the policy, precluded summary judgment in favor of board in action brought by teachers challenging their terminations. Land v. Board of Educ. of City of Chicago, 2002, 269 Ill.Dec. 452, 202 Ill.2d 414, 781 N.E.2d 249. Judgment 181(27)

Legislature clearly empowered the school board to lay off "employees." Land v. Board of Educ. of City of Chicago, App. 1 Dist.2001, 259 Ill.Dec. 49, 325 Ill.App.3d 294, 757 N.E.2d 912, rehearing denied , appeal allowed 262 Ill.Dec. 620, 198 Ill.2d 593, 766 N.E.2d 240, affirmed in part , reversed in part 269 Ill.Dec. 452, 202 Ill.2d 414, 781 N.E.2d 249. Schools 63(1)

"Employees," as used in statute empowering school board to lay off employees, embodies all persons who work for and are compensated by public schools, including tenured teachers. Land v. Board of Educ. of City of Chicago, App. 1 Dist.2001, 259 Ill.Dec. 49, 325 Ill.App.3d 294, 757 N.E.2d 912, rehearing denied , appeal allowed 262 Ill.Dec. 620, 198 Ill.2d 593, 766 N.E.2d 240, affirmed in part , reversed in part 269 Ill.Dec. 452, 202 Ill.2d 414, 781 N.E.2d 249. Schools 147.10

Five "honorably terminated" tenured public school teachers waived appellate review of claim that school board violated tenure laws by failing to first lay off temporary teachers, probationary teachers, or newly hired teachers, due to their failing to present any competent evidentiary matter to support assertion that they were laid off while temporary teachers, probationary teachers, or newly hired teachers were retained. Land v. Board of Educ. of City of Chicago, App. 1 Dist.2001, 259 Ill.Dec. 49, 325 Ill.App.3d 294, 757 N.E.2d 912, rehearing denied , appeal allowed 262 Ill.Dec. 620, 198 Ill.2d 593, 766 N.E.2d 240, affirmed in part , reversed in part 269 Ill.Dec. 452, 202 Ill.2d 414, 781 N.E.2d 249. Appeal And Error 179(2)

Although school board could establish a layoff policy, as authorized by section of School Code, it could not through that policy delegate its absolute layoff power to school administrators. Land v. Board of Educ. of City of Chicago, App. 1 Dist.2001, 259 Ill.Dec. 49, 325 Ill.App.3d 294, 757 N.E.2d 912, rehearing denied , appeal allowed 262 Ill.Dec. 620, 198 Ill.2d 593, 766 N.E.2d 240, affirmed in part , reversed in part 269 Ill.Dec. 452, 202 Ill.2d 414, 781 N.E.2d 249. Schools 63(1)

Genuine issue of material fact as to whether school board or some other entity or person determined that tenured teachers should have been laid off precluded summary judgment in favor of board in action brought by teachers challenging their "honorable terminations." Land v. Board of Educ. of City of Chicago, App. 1 Dist.2001, 259 Ill.Dec. 49, 325 Ill.App.3d 294, 757 N.E.2d 912, rehearing denied , appeal allowed 262 Ill.Dec. 620, 198 Ill.2d 593, 766 N.E.2d 240, affirmed in part , reversed in part 269 Ill.Dec. 452, 202 Ill.2d 414, 781 N.E.2d 249. Judgment 181(27)

Tenured teachers were properly notified of their termination, as was required under due process clause and school board's layoff policy; terminations were not "for cause," so as to trigger hearing procedures contained in tenure statutes, and teachers conceded that they received written notice of termination from board within the prescribed 14-day period. Land v. Board of Educ. of City of Chicago, App. 1 Dist.2001, 259 Ill.Dec. 49, 325 Ill.App.3d 294, 757 N.E.2d 912, rehearing denied , appeal allowed 262 Ill.Dec. 620, 198 Ill.2d 593, 766 N.E.2d 240, affirmed in part , reversed in part 269 Ill.Dec. 452, 202 Ill.2d 414, 781 N.E.2d 249. Constitutional Law 4202; Schools 147.34(1)

Included in powers of school board is authority to lay off employees in good faith for lack of work or purposes of economy, but board's actions may not be arbitrary, discriminatory or unreasonable, and board must act in good faith in ordering layoff of employees. Perlin v. Board of Ed. of City of Chicago, App. 1 Dist.1980, 41 Ill.Dec. 294, 86 Ill.App.3d 108, 407 N.E.2d 792. Schools 63(1)

© 2013 Thomson Reuters. No Claim to Orig. US Gov. Works.

Formerly cited as IL ST CH 122 ¶ 34-18

19. Termination

Male elementary school teacher could claim that school district wrongfully terminated him, under Illinois law, based on false charges that he improperly touched female first grade students, even though he sent letter of resignation, when letter came after district told him not to report for fall term and stopped paying him. Bogosian v. Board of Educ. of Community Unit School Dist. 200, N.D. Ill.2001, 134 F.Supp.2d 952. Schools 139

Failure of school board to explain why tenured physical education teacher was terminated precluded claim that he was validly dismissed for one of the reasons set forth in school termination policy. Chandler v. Board of Educ. of City of Chicago, N.D. Ill.2000, 92 F.Supp.2d 760. Schools 147.9

Failure of terminated physical education instructor to allege that school officers terminated him in deliberate or reckless disregard of his constitutional rights, or that conduct causing deprivation took place at their direction or with their knowledge and consent, precluded wrongful termination suit against officers in their individual capacities. Chandler v. Board of Educ. of City of Chicago, N.D. Ill.2000, 92 F.Supp.2d 760. Schools 63(3)

Public school district complied with procedures for "honorably terminating" tenured public school teachers; teachers were laid off because their teaching positions were closed and they received notification of the closings within the prescribed period. Land v. Board of Educ. of City of Chicago, App. 1 Dist.2001, 259 Ill.Dec. 49, 325 Ill.App.3d 294, 757 N.E.2d 912, rehearing denied , appeal allowed 262 Ill.Dec. 620, 198 Ill.2d 593, 766 N.E.2d 240, affirmed in part , reversed in part 269 Ill.Dec. 452, 202 Ill.2d 414, 781 N.E.2d 249. Schools 147.34(1)

105 I.L.C.S. 5/34-18, IL ST CH 105 § 5/34-18

Current through P.A. 97-1170 of the 2012 Reg. Sess., and through P.A. 98-4 of the 2013 Reg. Sess.

Copr (c) 2013 Thomson Reuters

END OF DOCUMENT

© 2013 Thomson Reuters. No Claim to Orig. US Gov. Works.

Effective: July 13, 2012

West's Smith-Hurd Illinois Compiled Statutes Annotated Currentness
Chapter 105. Schools (Refs & Annos)
Common Schools
Act 5. School Code (Refs & Annos)
Article 34. Cities of Over 500,000 Inhabitants--Board of Education (Refs & Annos)
School Action and Facility Master Planning
5/34-200. Definitions

§ 34-200. Definitions. For the purposes of Sections 34-200 through 34-235 of this Article:

"Capital improvement plan" means a plan that identifies capital projects to be started or finished within the designated period, excluding projects funded by locally raised capital not exceeding $10,000.

"Community area" means a geographic area of the City of Chicago defined by the chief executive officer as part of the development of the educational facilities master plan.

"Space utilization" means the percentage achieved by dividing the school's actual enrollment by its design capacity.

"School closing" or "school closure" means the closing of a school, the effect of which is the assignment and transfer of all students enrolled at that school to one or more designated receiving schools.

"School consolidation" means the consolidation of 2 or more schools by closing one or more schools and reassigning the students to another school.

"Phase-out" means the gradual cessation of enrollment in certain grades each school year until a school closes or is consolidated with another school.

"School action" means any school closing; school consolidation; co-location; boundary change that requires reassignment of students, unless the reassignment is to a new school with an attendance area boundary and is made to relieve overcrowding; or phase-out.

CREDIT(S)

Laws 1961, p. 31, § 34-200, added by P.A. 97-473, § 5, eff. Jan. 1, 2012; P.A. 97-474, § 5, eff. Aug. 22, 2011. Amended by P.A. 97-813, § 230, eff. July 13, 2012.

HISTORICAL AND STATUTORY NOTES

Sections 97 of P.A. 97-474, approved and effective Aug. 22, 2011, provided:

© 2013 Thomson Reuters. No Claim to Orig. US Gov. Works.

"Section 97. Control over other Act. Senate Bill 620 of the 97th General Assembly passed both houses on May 31, 2011. Thus, this amendatory Act of the 97th General Assembly (Senate Bill 630) is the one last acted upon by the General Assembly. If Senate Bill 620 becomes law and this amendatory Act (Senate Bill 630) becomes law, then this amendatory Act (Senate Bill 630) controls as provided in Section 6 of the Statute on Statutes (5 ILCS 70/6).

P.A. 97-813, the First 2012 General Revisory Act, amended various Acts to delete obsolete text, to correct patent and technical errors, to revise cross references, to resolve multiple actions in the 96th and 97th General Assemblies and to make certain technical corrections in P.A. 96-1480 through P.A. 97-625.

105 I.L.C.S. 5/34-200, IL ST CH 105 § 5/34-200

Current through P.A. 97-1165 of the 2012 Reg. Sess., and through P.A. 98-2 of the 2013 Reg. Sess.

Copr (c) 2013 Thomson Reuters

END OF DOCUMENT

© 2013 Thomson Reuters. No Claim to Orig. US Gov. Works.

Effective: November 30, 2012

West's Smith-Hurd Illinois Compiled Statutes Annotated Currentness
Chapter 105. Schools (Refs & Annos)
Common Schools
Act 5. School Code (Refs & Annos)
Article 34. Cities of Over 500,000 Inhabitants--Board of Education (Refs & Annos)
School Action and Facility Master Planning
→→ 5/34-225. School transition plans

§ 34-225. School transition plans.

(a) If the Board approves a school action, the chief executive officer or his or her designee shall work collaboratively with local school educators and families of students attending a school that is the subject of a school action to ensure successful integration of affected students into new learning environments.

(b) The chief executive officer or his or her designee shall prepare and implement a school transition plan to support students attending a school that is the subject of a school action that accomplishes the goals of this Section. The chief executive must identify and commit specific resources for implementation of the school transition plan for a minimum of the full first academic year after the board approves a school action.

(c) The school transition plan shall include the following:

(1) services to support the academic, social, and emotional needs of students; supports for students with disabilities, homeless students, and English language learners; and support to address security and safety issues;

(2) options to enroll in higher performing schools;

(3) informational briefings regarding the choice of schools that include all pertinent information to enable the parent or guardian and child to make an informed choice, including the option to visit the schools of choice prior to making a decision; and

(4) the provision of appropriate transportation where practicable.

(d) When implementing a school action, the Board must make reasonable and demonstrated efforts to ensure that:

(1) Affected students receive a comparable level of social support services provided by Chicago Public Schools that were available at the previous school, provided that the need for such social support services continue to exist; and

(2) Class sizes of any receiving school do not exceed those established under the Chicago Public Schools policy regarding class size, subject to principal discretion.

© 2013 Thomson Reuters. No Claim to Orig. US Gov. Works.

CREDIT(S)

Laws 1961, p. 31, § 34-225, added by P.A. 97-473, § 5, eff. Jan. 1, 2012; P.A. 97-474, § 5, eff. Aug. 22, 2011. Amended by P.A. 97-813, § 230, eff. July 13, 2012; P.A. 97-1133, § 5, eff. Nov. 30, 2012.

HISTORICAL AND STATUTORY NOTES

Sections 97 of P.A. 97-474, approved and effective Aug. 22, 2011, provided:

"Section 97. Control over other Act. Senate Bill 620 of the 97th General Assembly passed both houses on May 31, 2011. Thus, this amendatory Act of the 97th General Assembly (Senate Bill 630) is the one last acted upon by the General Assembly. If Senate Bill 620 becomes law and this amendatory Act (Senate Bill 630) becomes law, then this amendatory Act (Senate Bill 630) controls as provided in Section 6 of the Statute on Statutes (5 ILCS 70/6).

P.A. 97-813, the First 2012 General Revisory Act, amended various Acts to delete obsolete text, to correct patent and technical errors, to revise cross references, to resolve multiple actions in the 96th and 97th General Assemblies and to make certain technical corrections in P.A. 96-1480 through P.A. 97-625.

P.A. 97-1133 incorporated the amendments by P.A. 97-473, P.A. 97-474, and P.A. 97-813.

105 I.L.C.S. 5/34-225, IL ST CH 105 § 5/34-225

Current through P.A. 97-1165 of the 2012 Reg. Sess., and through P.A. 98-2 of the 2013 Reg. Sess.

Copr (c) 2013 Thomson Reuters

END OF DOCUMENT

© 2013 Thomson Reuters. No Claim to Orig. US Gov. Works.

Effective: August 22, 2011

West's Smith-Hurd Illinois Compiled Statutes Annotated Currentness
Chapter 105. Schools (Refs & Annos)
Common Schools
Act 5. School Code (Refs & Annos)
Article 34. Cities of Over 500,000 Inhabitants—Board of Education (Refs & Annos)
School Action and Facility Master Planning
→→ **5/34-230. School action public meetings and hearings**

§ 34-230. School action public meetings and hearings.

(a) By November 1 of each year, the chief executive officer shall prepare and publish guidelines for school actions. The guidelines shall outline the academic and non-academic criteria for a school action. These guidelines, and each subsequent revision, shall be subject to a public comment period of at least 21 days before their approval.

(b) The chief executive officer shall announce all proposed school actions to be taken at the close of the current academic year consistent with the guidelines by December 1 of each year.

(c) On or before December 1 of each year, the chief executive officer shall publish notice of the proposed school actions.

(1) Notice of the proposal for a school action shall include a written statement of the basis for the school action, an explanation of how the school action meets the criteria set forth in the guidelines, and a draft School Transition Plan identifying the items required in Section 34-225 of this Code for all schools affected by the school action. The notice shall state the date, time, and place of the hearing or meeting.

(2) The chief executive officer or his or her designee shall provide notice to the principal, staff, local school council, and parents or guardians of any school that is subject to the proposed school action.

(3) The chief executive officer shall provide written notice of any proposed school action to the State Senator, State Representative, and alderman for the school or schools that are subject to the proposed school action.

(4) The chief executive officer shall publish notice of proposed school actions on the district's Internet website.

(5) The chief executive officer shall provide notice of proposed school actions at least 30 calendar days in advance of a public hearing or meeting. No Board decision regarding a proposed school action may take place less than 60 days after the announcement of the proposed school action.

(d) The chief executive officer shall publish a brief summary of the proposed school actions and the date, time, and place of the hearings or meetings in a newspaper of general circulation.

(e) The chief executive officer shall designate at least 3 opportunities to elicit public comment at a hearing or meeting on a proposed school action and shall do the following:

© 2011 Thomson Reuters. No Claim to Orig. US Gov. Works.

(1) Convene at least one public hearing at the centrally located office of the Board.

(2) Convene at least 2 additional public hearings or meetings at a location convenient to the school community subject to the proposed school action.

(f) Public hearings shall be conducted by a qualified independent hearing officer chosen from a list of independent hearing officers. The general counsel shall compile and publish a list of independent hearing officers by November 1 of each school year. The independent hearing officer shall have the following qualifications:

(1) he or she must be a licensed attorney eligible to practice law in Illinois;

(2) he or she must not be an employee of the Board; and

(3) he or she must not have represented the Board, its employees or any labor organization representing its employees, any local school council, or any charter or contract school in any capacity within the last year.

(4) The independent hearing officer shall issue a written report that summarizes the hearing and determines whether the chief executive officer complied with the requirements of this Section and the guidelines.

(5) The chief executive officer shall publish the report on the district's Internet website within 5 calendar days after receiving the report and at least 15 days prior to any Board action being taken.

(g) Public meetings shall be conducted by a representative of the chief executive officer. A summary of the public meeting shall be published on the district's Internet website within 5 calendar days after the meeting.

(h) If the chief executive officer proposes a school action without following the mandates set forth in this Section, the proposed school action shall not be approved by the Board during the school year in which the school action was proposed.

CREDIT(S)

Laws 1961, p. 31, § 34-230, added by P.A. 97-473, § 5, eff. Jan. 1, 2012; P.A. 97-474, § 5, eff. Aug. 22, 2011.

HISTORICAL AND STATUTORY NOTES

Sections 97 of P.A. 97-474, approved and effective Aug. 22, 2011, provided:

"Section 97. Control over other Act. Senate Bill 620 of the 97th General Assembly passed both houses on May 31, 2011. Thus, this amendatory Act of the 97th General Assembly (Senate Bill 630) is the one last acted upon by the General Assembly. If Senate Bill 620 becomes law and this amendatory Act (Senate Bill 630) becomes law, then this amendatory Act (Senate Bill 630) controls as provided in Section 6 of the Statute on Statutes (5 ILCS 70/6).

P.A. 97-473 and P.A. 97-474 added identical versions of this section.

105 I.L.C.S. 5/34-230, IL ST CH 105 § 5/34-230

Current through P.A. 97-615 of the 2011 Reg. Sess.

© 2011 Thomson Reuters. No Claim to Orig. US Gov. Works.

Effective: November 30, 2012

West's Smith-Hurd Illinois Compiled Statutes Annotated Currentness
Chapter 105. Schools (Refs & Annos)
Common Schools
Act 5. School Code (Refs & Annos)
Article 34. Cities of Over 500,000 Inhabitants--Board of Education (Refs & Annos)
School Action and Facility Master Planning
→→ 5/34-232. Proposed school action announcement and notice; 2012-2013 school year

§ 34-232. Proposed school action announcement and notice; 2012-2013 school year. The following apply for school actions proposed during the 2012-2013 school year:

(1) On or before March 31, 2013, the chief executive officer shall announce all proposed school actions to be taken at the close of the current academic year consistent with the guidelines published under Section 34-230 of this Code.

(2) On or before March 31, 2013, the chief executive officer shall publish notice of the proposed school actions.

(3) The chief executive officer shall provide notice of proposed school actions at least 15 calendar days in advance of a public hearing or meeting.

All other provisions of Section 34-230 of this Code that do not conflict with this Section must be followed when proposing school actions.

CREDIT(S)

Laws 1961, p. 31, § 34-232, added by P.A. 97-1133, § 5, eff. Nov. 30, 2012.

105 I.L.C.S. 5/34-232, IL ST CH 105 § 5/34-232

Current through P.A. 97-1165 of the 2012 Reg. Sess., and through P.A. 98-2 of the 2013 Reg. Sess.

Copr (c) 2013 Thomson Reuters

END OF DOCUMENT

© 2013 Thomson Reuters. No Claim to Orig. US Gov. Works.

Chicago Public Schools Policy Manual

Title: SCHOOL PERFORMANCE, REMEDIATION AND PROBATION POLICY FOR THE 2011-2012 SCHOOL YEAR
Section: 302.6A
Board Report: 10-0728-PO4 **Date Adopted:** July 28, 2010

Policy:

THE CHIEF EXECUTIVE OFFICER RECOMMENDS:

That the Chicago Board of Education adopt a School Performance, Remediation and Probation Policy for the 2011-2012 School Year.

POLICY TEXT:

I. Purpose and Goals

This policy shall establish the standards and criteria for placing a school on Remediation or Probation for the 2011-2012 school year based on assessments administered in Spring 2011 and other performance data from prior school years. A school's accountability status from the 2010-2011 school year shall remain in effect until such time as the school is notified of their new status issued in accordance with this policy.

This policy sets out a systematic means for identifying schools in need of remedial assistance and increased oversight due to insufficient levels of achievement. Section 5/34-8.3 of the Illinois School Code provides for the remediation and probation of attendance centers and requires the Chief Executive Officer ("CEO") to monitor the performance of each school using the criteria and rating system established by the Board to identify those schools in which: (1) there is a failure to develop, implement, or comply with the school improvement plan; (2) there is a pervasive breakdown in the educational program as indicated by various factors such as the absence of improvement in reading and math achievement scores, an increased drop-out rate, a decreased graduation rate, or a decrease in the rate of student attendance, or (3) there is a failure or refusal to comply with the provisions of the School Code, other applicable laws, collective bargaining agreements, court orders, or with applicable Board rules and policies.

The Board recognizes that an effective and fair school remediation and probation system considers student test score performance, student growth and progress trends. Therefore, this policy establishes a comprehensive system to assess school performance in order to identify, monitor and assist schools with low student test scores as well as schools with stagnant or insufficient rates of student improvement.

II. Scope of the Policy

All Chicago Public Schools ("CPS") shall be subject to this policy, except charter schools under contract with the Board. A charter school shall receive an accountability designation using the criteria hereunder for purposes of comparison to other CPS schools and public reporting. A decision to renew or revoke a school's charter is governed by the terms of a school's applicable performance agreement and accountability plan with the Board.

Schools newly established by the Board shall receive an accountability designation after the third year of operation or at such time as adequate measures of student achievement become available.

III. Definitions

Remediation: An accountability designation assigned to schools where the CEO determines that a school's budget or any amendment thereto may compromise the implementation of the school's No Child Left Behind Act (NCLB) Corrective Action measures or Restructuring Plan.

Probation: An accountability designation assigned to non-performing schools where the CEO determines, utilizing the criteria set out in this policy, that a school requires remedial probation measures as described in this policy, including increased oversight, to address performance deficiencies.

Good Standing: An accountability designation assigned to schools where the CEO determines, based on the criteria set out in this policy, that student performance and improvement meets or exceeds district standards.

Adequate Yearly Progress: School rating issued by the Illinois State Board of Education that identifies if students are improving their performance based on the established annual targets.

Achievement Level 1: Shall mean the rating for:

- an elementary school that obtains a total performance score of thirty (30) or above or with at least 71% of the available performance points; or
- a high school that obtains a total performance score of twenty-eight (28) or above or with at least 66.7% of the available performance points.

Achievement Level 2: Shall mean the rating for:

- an elementary school that obtains a total performance score of twenty-one (21) to twenty-nine (29) or with 50%-70.9% of the available performance points; or
- a high school that obtains a total performance score of eighteen and two-thirds (18.67) to twenty-seven and two-thirds (27.67) or with 44%-66.6% of the available performance points.

Achievement Level 3: Shall mean the rating for:

- an elementary school that obtains a total performance score of twenty (20) or below or with less than 50% of the available performance points; or
- a high school that obtains a total performance score of eighteen and one-third (18.33) or below or with less than 44% of the available performance points.

Value-Added: Shall mean the metric that assesses school effects on students' academic growth, controlling for student characteristics, grade level, and prior performance through a regression methodology. Academic growth is measured by the change in scale score points on the ISAT from one year to the next.

ISAT: means the Illinois Standards Achievement Test.

ISAT Composite: means the composite score from ISAT Reading, Mathematics and Science test results.

PSAE: means the Prairie State Achievement Examination.

PSAE Composite: means the composite score from PSAE Reading, Mathematics and Science test results.

EPAS: means the series of three assessments (EXPLORE, PLAN and ACT) that are administered to high school students in the following order: (1) EXPLORE – administered to high school freshmen, (2) PLAN – administered to high school sophomores, and (3) ACT – administered to high school juniors.

Freshmen On-Track: Shall mean the percentage of first-time freshmen students who earn five credits in their freshman year and fail no more than one semester core course (English, Mathematics, Science and Social Science).

One-Year Drop-out Rate: Shall mean the percentage of students who drop-out in a given year who have not previously dropped out.

Membership Days: Shall mean the number of days that the students on a school's enrollment register should be in attendance. Membership days will end for 8th and 12th graders on the date of graduation authorized by the Board and shall be adjusted for students with medically fragile conditions.

Attendance Rate: Shall mean the total number of actual student attendance days divided by the number of total student membership days.

Advanced Placement (AP) Class: Shall mean a college-level course approved by the College Board to be designated as AP in accordance with established requirements.

International Baccalaureate (IB) Class: Shall mean a college-level course approved by the International Baccalaureate Organization to be designated as an IB class in accordance with established requirements.
AP Exam: Shall mean the end of course exam established by the College Board that is administered upon completion of an AP class.

IB Exam: Shall mean the end of course exam established by the International Baccalaureate Organization that is administered upon completion of an IB class.

IV. PERFORMANCE EVALUATION SYSTEM

A. Calculation of Score

Every school shall receive a performance score based upon its level of current performance, trend over time and student growth as described in Section V below. A school will be evaluated on each of the accountability indicators identified in Section V using best available data and will receive a score for each indicator as well as a total performance score that accounts for the school's overall performance on all accountability indicators. The total performance score will be used to determine whether a school qualifies for an Achievement Level 1, 2 or 3 rating. A school shall receive an accountability status hereunder whereby the school shall be identified as either on Probation, in Good Standing or in Remediation, as further described herein.

B. Determinations

1. **Scoring Exceptions:** Schools that do not qualify for all points hereunder due to the following circumstances shall have their Achievement level determinations based on the percentage of available points earned rather than the actual points earned: (a) if data for two previous years is not available for a particular metric measuring change over time, the school will not get a score for that metric; (b) if data is available but not reliable due to no fault of the school, the CEO may remove the affected metric from consideration and the school will not get a score for that metric. ISAT and PSAE scores of students who are English Language Learners in program years 0-5 will not be factored into current status or trend scores hereunder.

2. **Accountability Status Determination:** A school with an Achievement Level 3 score hereunder shall receive Probation status. A school with an Achievement Level 1 score or an Achievement Level 2 score hereunder shall receive Good Standing status, except for the following which shall receive Probation status hereunder:

a. A school that has not satisfied the following minimum ISAT or PSAE composite score requirement:
   i. Elementary school minimum 2011 ISAT Composite score - 50% meeting or exceeding state standards
   ii. High school minimum 2011 PSAE Composite score - 10% meeting or exceeding state standards.

b. A school that has not satisfied all applicable sustained academic improvement requirements set out in Section VII as follows:
   i. A school that has been on Probation status for 2 or more consecutive years must receive a Level 1 or Level 2 rating for 2 consecutive years to be removed from Probation; or
   ii. A school where the Board has taken an action under 105 ILCS 5/34-8.3(d)(2) or (4) must remain on Probation for a minimum of 5 years or until the school has made Adequate Yearly Progress for 2 consecutive years, whichever occurs later.

Notwithstanding the foregoing, a school with Good Standing status may be placed in Remediation in accordance with Section IV.B.3.

3. **NCLB School Improvement Status:** For schools not on Probation but that have either "Corrective Action", "Restructuring Planning" or "Restructuring Implementation" status under NCLB, the CEO reserves the right to place the school in Remediation status at any time if the CEO determines that the school's budget or any amendment thereto may compromise the implementation of the school's NCLB Corrective Action or Restructuring Plan.

V. ACCOUNTABILITY INDICATORS, STANDARDS AND SCORING

A. Elementary School Indicators, Standards and Scoring

An elementary school may receive a total performance rating score ranging from zero (0) to forty (42). For the 2011-2012 school year, the current status, trend and growth indicators and standards that determine an elementary school's performance score shall be as follows:

1. ISAT Mathematics – 6 possible points

a. Current Status - An elementary school shall be evaluated on the percentage of students ***meeting or exceeding*** state standards as indicated by the school's ISAT mathematics results. Current status is determined by averaging the school's ISAT mathematics results from tests administered in Spring 2010 and Spring 2011. If the school does not have two years of data, one year of data will be used. A school shall receive points towards its overall performance score as follows:

80% or more meeting or exceeding	=	3 points
70%-79.9% meeting or exceeding	=	2 points
50%-69.9% meeting or exceeding	=	1 point
Under 50% meeting or exceeding	=	0 points

b. Trend - An elementary school shall be evaluated on improvement in the percentage of students ***meeting or exceeding*** state standards on ISAT mathematics. Improvement trend is determined by comparing the 2011 score with the average score of the three previous years. If the school does not have three previous years of data, two years of data will be used. A school shall receive points as follows:

- For schools with 0%-89.9% of students meeting or exceeding state standards on the 2011 ISAT mathematics assessment, points are earned as follows:

No Improvement	=	0 points
Improvement of at least 0.1 but under 3.0 percentage points	=	1 point
Improvement of at least 3.0 but under 6.0 percentage points	=	2 points
Improvement of at least 6.0 percentage points	=	3 points

- Schools with 90% or more of students meeting or exceeding state standards on the 2011 ISAT mathematics assessment automatically earn 3 points regardless of improvement.

2. ISAT Reading – 6 possible points

a. Current Status - An elementary school shall be evaluated on the percentage of students ***meeting or exceeding*** state standards as indicated by the school's ISAT reading results. Current status is determined by averaging the school's ISAT reading results from tests administered in Spring 2010 and Spring 2011. If the school does not have two years of data, one year of data will be used. A school shall receive points towards its overall performance score as follows:

80% or more meeting or exceeding	=	3 points
70%-79.9% meeting or exceeding	=	2 points
50%-69.9% meeting or exceeding	=	1 point
Under 50% meeting or exceeding	=	0 points

b. Trend - An elementary school shall be evaluated on improvement in the percentage of students ***meeting or exceeding*** state standards on ISAT reading. Improvement trend is determined by comparing the 2011 score with the average score of the three previous years. If the school does not have three previous years of data, two years of data will be used. A school shall receive points as follows:

- For schools with 0%-89.9% of students meeting or exceeding state standards on the 2011 ISAT reading assessment, points are earned as follows:

No Improvement	=	0 points
Improvement of at least 0.1 but under 3.0 percentage points	=	1 point

Improvement of at least 3.0 but under 6.0 percentage points	=	2 points
Improvement of at least 6.0 percentage points	=	3 points

- Schools with 90% or greater of students meeting or exceeding state standards on the 2011 ISAT reading assessment automatically earn 3 points regardless of improvement.

3. *ISAT Science – 6 possible points*

a. Current Status - An elementary school shall be evaluated on the percentage of students ***meeting or exceeding*** state standards as indicated by the school's ISAT science results. Current status is determined by averaging the school's ISAT science results from tests administered in Spring 2010 and Spring 2011. If the school does not have two years of data, one year of data will be used. A school shall receive points towards its overall performance score as follows:

80% or more meeting or exceeding	=	3 points
70%-79.9% meeting or exceeding	=	2 points
50%-69.9% meeting or exceeding	=	1 point
Under 50% meeting or exceeding	=	0 points

b. Trend - An elementary school shall be evaluated on improvement in the percentage of students ***meeting or exceeding*** state standards on ISAT science. Improvement trend is determined by comparing the 2011 score with the average score of the three previous years. If the school does not have three previous years of data, two years of data will be used. A school shall receive points as follows:

- For schools with 0%-89.9% of students meeting or exceeding state standards on the 2011 ISAT science assessment, points are earned as follows:

No Improvement	=	0 points
Improvement of at least 0.1 but under 3.0 percentage points	=	1 point
Improvement of at least 3.0 but under 6.0 percentage points	=	2 points
Improvement of at least 6.0 percentage points	=	3 points

- Schools with 90% or greater of students meeting or exceeding state standards on the 2011 ISAT science assessment automatically earn 3 points regardless of improvement.

4. *ISAT Composite - All Grades – 6 possible points*

a. Current Status - An elementary school shall be evaluated on the percentage of students in all grades who are ***exceeding*** state standards as indicated by the school's ISAT Composite. Current status is determined by averaging the school's ISAT Composite results from tests administered in Spring 2010 and Spring 2011. If the school does not have two years of data, one year of data will be used. A school shall receive points towards its overall performance score as follows:

25% or more exceeding	=	3 points
15%-24.9% exceeding	=	2 points
5%-14.9% exceeding	=	1 point
Under 5% exceeding	=	0 points

b. Trend - An elementary school shall be evaluated on improvement in the percentage of students in all grades who are ***exceeding*** state standards on ISAT Composite. Improvement trend is determined by comparing the 2011 score for all students with the average score of the three previous years. If the school does not have three previous years of data, two years of data will be used. A school shall receive points as follows:

- For schools with 0%-89.9% of students in all grades exceeding state standards on the 2011 ISAT Composite, points are earned as follows:

No Improvement	=	0 points
Improvement of at least 0.1 but under 3.0 percentage points	=	1 point

Improvement of at least 3.0 but under 6.0 percentage points	=	2 points
Improvement of at least 6.0 percentage points	=	3 points

- Schools with 90% or greater of students in all grades exceeding state standards on the 2011 ISAT Composite automatically earn 3 points regardless of improvement.

5. ISAT Composite – Highest Grade Students – 6 possible points

a. Current Status - An elementary school shall be evaluated on the percentage of students in the school's highest grade level who are ***exceeding*** state standards as indicated by the school's ISAT Composite. Current status is determined by averaging the school's ISAT Composite results for students in the highest grade from tests administered in Spring 2010 and Spring 2011. If the school does not have two years of data, one year of data will be used. A school shall receive points towards its overall performance score as follows:

25% or more exceeding	=	3 points
15%-24.9% exceeding	=	2 points
5%-14.9% exceeding	=	1 point
Under 5% exceeding	=	0 points

b. Trend - An elementary school shall be evaluated on improvement in the percentage of students in the school's highest grade level who are ***exceeding*** state standards on ISAT Composite. Improvement trend is determined by comparing the 2011 score for students in the highest grade with the average score of the three previous years. If the school does not have three previous years of data, two years of data will be used. A school shall receive points as follows:

- For schools with 0%-89.9% of students in the highest grade exceeding state standards on the 2011 ISAT Composite, points are earned as follows:

No Improvement	=	0 points
Improvement of at least 0.1 but under 3.0 percentage points	=	1 point
Improvement of at least 3.0 but under 6.0 percentage points	=	2 points
Improvement of at least 6.0 percentage points	=	3 points

- Schools with 90% or greater of students in the highest grade exceeding state standards on the 2011 ISAT Composite automatically earn 3 points regardless of improvement.

6. Attendance – 6 possible points

a. Current Status - An elementary school shall be evaluated on its average attendance rate from the two most recent school years. To determine current status, a school's average attendance rates from the 2009-2010 school year and from the 2010-2011 school year will be averaged. If two years of data are not available, one year of data will be used. A school shall receive points towards its overall performance score as follows:

95% or more attendance rate	=	3 points
93%-94.9% attendance rate	=	2 points
90%-92.9% attendance rate	=	1 point
Under 90% attendance rate	=	0 points

b. Trend - An elementary school shall be evaluated on improvement of its average attendance rate. Improvement trend is determined by comparing the 2010-2011 attendance rate with the average rate of the three previous years. If the school does not have three previous years of data, two years of data will be used. A school shall receive points as follows:

- For schools with a 2010-2011 attendance rate of 0%-94.9%, points are earned as follows:

No Improvement	=	0 points
Improvement of at least 0.1 but under 0.5 percentage points	=	1 point
Improvement of at least 0.5 but under 1.0 percentage points	=	2 points

Improvement of at least 1.0 percentage points	=	3 points

- Schools with a 2010-2011 attendance rate of 95% or greater earn 3 points regardless of improvement.

7. *Value-Added – ISAT Reading – 3 possible points*

Value-Added Score – An elementary school shall be evaluated on its Value-Added scale score gain for ISAT reading and shall receive points towards its overall performance score as follows:

At least one standard deviation above the district average in 2011	= 3 points
Greater than or equal to the district average, but less than one standard deviation above the district average in 2011	= 2 points
Below the district average, but by no more than one standard deviation in 2011	= 1 point
More than one standard deviation below the district average in 2011	= 0 points

8. *Value-Added - ISAT Mathematics – 3 possible points*

Value-Added Score – An elementary school shall be evaluated on its Value-Added scale score gain for ISAT mathematics and shall receive points towards its overall performance score as follows:

At least one standard deviation above the district average in 2011	= 3 points
Greater than or equal to the district average, but less than one standard deviation above the district average in 2011	= 2 points
Below the district average, but by no more than one standard deviation in 2011	= 1 point
More than one standard deviation below the district average in 2011	= 0 points

B. <u>High School Indicators, Standards and Scoring</u>

A high school may receive a total performance score ranging from zero (0) to forty-two (42). For the 2011-2012 school year, the current status, trend, and growth indicators and standards that determine a high school's performance score shall be as follows:

1. *One-Year Drop-Out Rate – 6 possible points*

a. Current Status - A high school shall be evaluated on its one-year drop-out rate averaged from the two most recent school years. To determine current status, a school's one-year drop-out rates from the 2009-2010 school year and from the 2010-2011 school year will be averaged. If two years of data are not available, one year of data will be used. A school shall receive points towards its overall performance score as follows:

2% or less drop out in one year	=	3 points
2.1% - 6% drop out in one year	=	2 points
6.1% - 10% drop out in one year	=	1 point
More than 10% drop out in one year	=	0 points

b. Trend – A high school shall be evaluated on improvement of its one-year drop-out rate. Improvement trend is determined by comparing the 2010-2011 rate with the average rate of the three previous years. If the school does not have three previous years of data, two years of data will be used. A school shall receive points as follows:

- For schools with a 2010-2011 one-year drop-out rate of more than 0.5%, points are earned as follows:

No reduction	=	0 points
Reduction of at least 0.1 but under 1.0 percentage points	=	1 point
Reduction of at least 1.0 but under 3.0 percentage points	=	2 points
Reduction of at least 3.0 percentage points	=	3 points

- Schools with a 2010-2011 one-year drop-out rate of 0.5% or less automatically earn 3 points regardless of improvement

2. *Freshmen On-Track – 6 possible points*

a. Current Status – A high school shall be evaluated on its Freshmen On-Track rate averaged from the two most recent school years. To determine current status, a school's Freshmen On-Track rates for the 2009-2010 school year and the 2010-2011 school year will be averaged. If two years of data are not available, one year of data will be used. A school shall receive points towards its overall performance score as follows:

80% or more on track	=	3 points
60%-79.9% on track	=	2 points
45%-59.9% on track	=	1 point
Less than 45% on track	=	0 points

b. Trend – A high school shall be evaluated on improvement of its Freshmen On-Track rate. Improvement trend is determined by comparing the 2010-2011 rate with the average rate of the three previous years. If the school does not have three previous years of data, two years of data will be used. The school shall receive points as follows:

- For schools with a 2010-2011 Freshman On-Track rate of 0%-89.9%, points are earned as follows:

No Improvement	=	0 points
Improvement of at least 0.1 but under 2.5 percentage points	=	1 point
Improvement of at least 2.5 but under 5.0 percentage points	=	2 points
Improvement of at least 5.0 percentage points	=	3 points

- Schools with a 2010-2011 Freshman On-Track rate of 90% or greater automatically earn 3 points regardless of improvement.

3. *ACT Score – 6 possible points*

a. Current Status – A high school shall be evaluated on its average ACT score. To determine current status, a school's average ACT scores for tests administered to students in Grade 11 during the Spring 2010 PSAE administration and during the Spring 2011 PSAE administration will be averaged. If two years of data are not available, one year of data will be used. The school shall receive points towards its overall performance score as follows:

Average ACT score is 20 or more	=	3 points
Average ACT score is at least 18, but less than 20	=	2 points
Average ACT score is at least 16, but less than 18	=	1 point
Average ACT score is less than 16	=	0 points

b. Trend – A high school shall be evaluated on improvement of its average ACT score. Improvement trend is determined by comparing the 2011 average ACT score with the average ACT score of the three previous years. If the school does not have three previous years of data, two years of data will be used. The school shall receive points as follows:

- For schools with a 2011 average ACT score of 0-22.9, points are earned as follows:

No Improvement	=	0 points
Improvement of at least 0.1 but under 0.5	=	1 point
Improvement of at least 0.5 but under 1.0	=	2 points
Improvement of at least 1.0	=	3 points

- Schools with a 2011 average ACT of 23 or greater automatically earn 3 points regardless of improvement.

4. *PSAE Reading Score– 2 possible points*

a. Current Status - A high school shall be evaluated on the percentage of students **meeting or exceeding** state standards as indicated by the school's PSAE reading results averaged from the two most recent school years. To determine current status, the school's PSAE reading results from tests administered to students in Grade 11 in Spring 2010 and Spring 2011 shall be averaged. If two years of data are not available, one year of data will be used. A school shall receive points towards its overall performance score as follows:

70% or more meeting or exceeding	=	1 point
50%-69.9% meeting or exceeding	=	2/3 point
30%-49.9% meeting or exceeding	=	1/3 point
Less than 30% meeting or exceeding	=	0 points

b. Trend - A high school shall be evaluated on improvement in the percentage of students ***meeting or exceeding*** state standards on PSAE reading. Improvement trend is determined by comparing the 2011 score with the average score of the three previous years. If the school does not have three previous years of data, two years of data will be used. A school shall receive points as follows:

- For schools with 0%-89.9% of students meeting or exceeding state standards on the 2011 PSAE reading assessment, points are earned as follows:

No Improvement	=	0 points
Improvement of at least 0.1 but under 2.5 percentage points	=	1/3 point
Improvement of at least 2.5 but under 5.0 percentage points	=	2/3 point
Improvement of at least 5.0 percentage points	=	1 point

- Schools with 90% or greater of students meeting or exceeding state standards on the 2011 PSAE reading assessment automatically earn 1 point regardless of improvement.

5. *PSAE Mathematics Score– 2 possible points*

a. Current Status - A high school shall be evaluated on the percentage of students **meeting or exceeding** state standards as indicated by the school's PSAE mathematics results averaged from the two most recent school years. To determine current status, the school's PSAE mathematics results from tests administered to students in Grade 11 in Spring 2010 and Spring 2011 shall be averaged. If two years of data are not available, one year of data will be used. A school shall receive points towards its overall performance score as follows:

70% or more meeting or exceeding	=	1 point
50%-69.9% meeting or exceeding	=	2/3 point
30%-49.9% meeting or exceeding	=	1/3 point
Less than 30% meeting or exceeding	=	0 points

b. Trend - A high school shall be evaluated on improvement in the percentage of students ***meeting or exceeding*** state standards on PSAE mathematics. Improvement trend is determined by comparing the 2011 score with the average score of the three previous years. If the school does not have three previous years of data, two years of data will be used. A school shall receive points as follows:

- For schools with 0%-89.9% of students meeting or exceeding state standards on the 2011 PSAE mathematics assessment, points are earned as follows:

No Improvement	=	0 points
Improvement of at least 0.1 but under 2.5 percentage points	=	1/3 point
Improvement of at least 2.5 but under 5.0 percentage points	=	2/3 point
Improvement of at least 5.0 percentage points	=	1 point

- Schools with 90% or greater of students meeting or exceeding state standards on the 2011 PSAE mathematics assessment automatically earn 1 point regardless of improvement.

6. *PSAE Science Score– 2 possible points*

a. Current Status - A high school shall be evaluated on the percentage of students **meeting or exceeding** state standards as indicated by the school's PSAE science results averaged from the two most recent school years. To determine current status, the school's PSAE science results from tests administered to students in Grade 11 in Spring 2010 and Spring 2011 shall be averaged. If two years of data are not available, one year of data will be used. A school shall receive points towards its overall performance score as follows:

70% or more meeting or exceeding	=	1 point
50%-69.9% meeting or exceeding	=	2/3 point
30%-49.9% meeting or exceeding	=	1/3 point
Less than 30% meeting or exceeding	=	0 points

b. Trend - A high school shall be evaluated on improvement in the percentage of students ***meeting or exceeding*** state standards on PSAE science. Improvement trend is determined by comparing the 2011 score with the average score of the three previous years. If the school does not have three previous years of data, two years of data will be used. A school shall receive points as follows:

- For schools with 0%-89.9% of students meeting or exceeding state standards on the 2011 PSAE science assessment, points are earned as follows:

No Improvement	=	0 points
Improvement of at least 0.1 but under 2.5 percentage points	=	1/3 point
Improvement of at least 2.5 but under 5.0 percentage points	=	2/3 point
Improvement of at least 5.0 percentage points	=	1 point

- Schools with 90% or greater of students meeting or exceeding state standards on the 2011 PSAE science assessment automatically earn 1 point regardless of improvement.

7. *Attendance – 6 possible points*

a. Current Status - A high school shall be evaluated on its average attendance rate from the two most recent school years. To determine current status, a school's attendance rates from the 2009-2010 school year and the 2010-2011 school year will be averaged. If two years of data are not available, one year of data will be used. A school shall receive points towards its overall performance score as follows:

95% or more attendance rate	=	3 points
90%-94.9% attendance rate	=	2 points
85%-89.9% attendance rate	=	1 point
Under 85% attendance rate	=	0 points

b. Trend - A high school shall be evaluated on improvement of its average attendance rate. Improvement trend is determined by comparing the 2010-2011 attendance rate with the average rate of the three previous years. If the school does not have three previous years of data, two years of data will be used. A school shall receive points as follows:

- For schools with a 2010-2011 attendance rate of 0%-94.9%, points are earned as follows:

No Improvement	=	0 points
Improvement of at least 0.1 but under 0.5 percentage points	=	1 point
Improvement of at least 0.5 but under 1.0 percentage points	=	2 points
Improvement of at least 1.0 percentage points	=	3 points

- Schools with a 2010-2011 attendance rate of 95% or greater earn 3 points regardless of improvement.

8. *Students Enrolled in AP or IB Classes – 3 Possible Points*

Trend – A high school shall be evaluated on improvement in the percentage of its students enrolled in at least one AP or IB class. Improvement trend is determined by comparing the 2010-2011 enrollment

percentage with the average percentage of the three previous years. If the school does not have three previous years of data, two years of data will be used. A school shall receive points as follows:

- For schools with a 2010-2011 AP/IB enrollment rate of 0%-34.9%, points are earned as follows:

No Improvement	=	0 points
Improvement of at least 0.1 but under 2.5 percentage points	=	1 point
Improvement of at least 2.5 but under 5.0 percentage points	=	2 points
Improvement of at least 5.0 percentage points	=	3 points

- Schools with a 2010-2011 AP/IB enrollment rate of 35% or greater earn 3 points regardless of improvement.

9. *Students Scoring 3+ on AP Exams or 4+ on IB Exams – 3 Possible Points*

Trend – A high school shall be evaluated on improvement on the percentage of its students who are enrolled in AP classes that score 3+ on at least one AP exam, or are enrolled in IB classes that score 4+ on at least one IB exam. Improvement trend is determined by comparing the 2010-2011 AP/IB success percentage with the average percentage of the three previous years. If the school does not have three previous years of data, two years of data will be used. A school shall receive points as follows:

- For schools with 0%-89.9% of AP/IB enrolled students scoring 3+ on AP exams or 4+ on IB exams in 2010-2011, points are earned as follows:

No Improvement	=	0 points
Improvement of at least 0.1 but under 1.0 percentage points	=	1 point
Improvement of at least 1.0 but under 3.0 percentage points	=	2 points
Improvement of at least 3.0 percentage points	=	3 points

- Schools with 90% or greater of AP/IB enrolled students scoring 3+ on AP exams or 4+ on IB exams in 2010-2011 earn 3 points regardless of improvement.

10. *Students Making Expected EPAS Reading Gains – 3 possible points*

Current Status - A high school shall be evaluated on the percentage of its students making expected gains in reading from one year to the next on the EPAS assessment series as follows:

Schools with an EPAS Reading Gains score at or above the 85th district-wide percentile	=	3 points
Schools with an EPAS Reading Gains score at or above the 50th district-wide percentile, but below the 85th district-wide percentile	=	2 points
Schools with an EPAS Reading Gains score at or above the 15th district-wide percentile, but below the 50th district-wide percentile	=	1 point
Schools with an EPAS Reading Gains score below the 15th district-wide percentile	=	0 points

11. *Students Making Expected EPAS Mathematics Gains – 3 possible points*

Current Status - A high school shall be evaluated on the percentage of its students making expected gains in mathematics from one year to the next on the EPAS assessment series as follows:

Schools with an EPAS Mathematics Gains score at or above the 85th district-wide percentile	=	3 points
Schools with an EPAS Mathematics Gains score at or above the 50th district-wide percentile, but below the 85th district-wide percentile	=	2 points
Schools with an EPAS Mathematics Gains score at or above the 15th district-wide percentile, but below the 50th district-wide percentile	=	1 point
Schools with an EPAS Mathematics Gains score below the 15th district-wide percentile	=	0 points

VI. SCHOOLS IDENTIFIED AS NEEDING REMEDIAL ASSISTANCE

On a date to be determined by the CEO or his designee, after school performance data is available, schools will be notified as to their accountability designation hereunder.

A. Schools Placed on Remediation

Any school that receives a Remediation status as described in Section IV.B. hereunder shall participate in a remedial program in which a Remediation Plan is developed by the CEO. A Remediation Plan may include one or more of the following components:

1. Drafting a new school improvement plan;
2. Additional training for the local school council;
3. Directing the implementation of the school improvement plan; and
4. Mediating disputes or other obstacles to reform or improvement at the school.

In creating a Remediation Plan, the CEO or designee shall monitor and give assistance to these schools to ensure that all aspects of the plan, including the school budget, address the educational deficiencies at these schools and ensure the development and full implementation of a school's NCLB Corrective Action measures and/or Restructuring plan.

For all schools placed on Remediation, the CEO or designee shall approve the final Remediation Plan, including the school budget.

B. Schools Placed on Probation

1. School Improvement Plan and Budget: Each school placed on Probation shall have a school improvement plan and a school budget for correcting deficiencies identified by the Board. The CEO or designee shall develop a school improvement plan that shall contain specific steps that the local school council and the school staff must take to correct identified deficiencies. The school budget shall include specific expenditures directly calculated to correct educational and operational deficiencies identified at the school.

In creating or updating the required plan, the CEO or designee shall give assistance to Probation schools to ensure that all aspects of the plan, including the school budget, reflect and are tailored to the individual needs of the school and that the plan addresses the educational deficiencies at these schools. For schools with a federal school improvement status for failure to make adequate yearly progress (AYP), the school improvement plan shall also include strategies and activities to achieve AYP and ensure the development and full implementation of the school's NCLB Corrective Action measures and/or Restructuring plan, as applicable.

The Board shall approve school improvement plans and budget for all schools, including schools placed on Probation, as part of the annual school fiscal year budget resolution. Any updates to such school improvement plan or school budget to address new data on the deficiencies at Probation schools and schools with a federal school improvement status shall be approved by the Board in accordance with the state's timeline for Board approval of federal school improvement plans. Thereafter, any amendments to the school improvement plan or budget shall be approved by the CEO or designee.

Except when otherwise specified by the CEO, the Chief Area Officer (CAO) and CAO designees shall serve as the probation team that will identify the educational and operational deficiencies at Probation schools in their Area to be addressed in the school improvement plan and budget presented to the Board for approval.

2. Monitoring: The CEO or designee shall monitor each Probation school's implementation of the final plan and the progress the school makes toward implementation of the plan and the correction of its educational deficiencies.

3. Additional Corrective Measures: Schools placed on Probation that, after at least one year, fail to make adequate progress in correcting deficiencies are subject to the following actions by the approval of the Board, after an opportunity for a hearing:

a. Ordering new local school council elections;
b. Removing and replacing the principal;
c. Replacement of faculty members, subject to the provisions of Section 24A-5 of the Illinois School Code;
d. Reconstitution of the attendance center and replacement and reassignment by the CEO of all employees of the attendance center;
e. Intervention under Section 34-8.4 of the Illinois School Code;
f. Operating an attendance center as a contract turnaround school;
g. Closing of the school; or
h. Any other action authorized under Section 34-8.3 of the Illinois School Code

The Law Department shall develop and disseminate hearing procedures for hearings required before taking any of the corrective actions specified above.

VII. REMOVAL FROM PROBATION STATUS – SUSTAINED ACADEMIC IMPROVEMENT REQUIREMENTS

A. The Chief Executive Officer shall remove from Probation any school that no longer meets the criteria established by the Board for a Probation status as follows:

1. Except as provided in Section VII.B below, schools in their first year of Probation status during the 2010-2011 school year shall be removed from probation if they achieve Achievement Level 1 or Achievement Level 2 rating hereunder.

2. Except as provided in Section VII.B below, schools in their second or later year of probation status during the 2010-2011 school year must show sustained academic improvement with two consecutive years of Achievement Level 1 or Achievement Level 2 ratings to be removed from Probation.

B. Notwithstanding anything herein to the contrary, for schools where the Board has taken action under 105 ILCS 5/34-8.3(d)(2) or (4), the school will remain on Probation until such time as the school makes Adequate Yearly Progress for two consecutive years or until a period of five (5) years has passed since the Board took such 8.3(d)(2) or (4) action, whichever occurs later.

Amends/Rescinds:	Adopted 10-0728-PO4 (2011-2012 School Year)
Cross References:	10-0728-PO3; 09-0624-PO1; 08-0602-PO2; 07-0328-PO1; 06-0823-PO2; 06-0322-PO2; 04-0225-PO3; 03-0423-PO03; 02-1218-PO01; 99-0825-PO2
Legal References:	105 ILCS 5/34-8.3; 105 ILCS 5/34-8.4; 105 ILCS 5/24A-5.

Chicago Public Schools Policy Manual

Title: REVIEW AND ESTABLISHMENT OF SCHOOL ATTENDANCE BOUNDARIES
Section: 703.2
Board Report: 05-0622-PO1 **Date Adopted:** June 22, 2005

Policy:

THE CHIEF EXECUTIVE OFFICER RECOMMENDS THE FOLLOWING:

Adopt a policy for the review and establishment of school attendance boundaries.

PURPOSE:

The purpose of this policy is to establish a process and procedures for the establishment of attendance boundaries for new schools and for the review and revision of attendance boundaries that the Board may determine are necessary from time to time.

POLICY TEXT:

I. Annual Review of Attendance Boundaries

The Department of School Demographics and Planning (DSP) shall review the enrollment at existing schools to determine if there is a need to revise existing boundaries as necessary. If it is determined that there is a need to revise any existing boundaries, DSP shall develop and recommend any proposed changes to the Chief Executive Officer prior to the beginning of the school year in which the changes will take effect. In addition, DSP shall have responsibility for developing and recommending proposed boundaries for new schools to the Chief Executive Officer prior to the beginning of the school year in which the new school boundaries will take effect.

II. Factors to be Considered

In reviewing and proposing revisions to boundaries for existing schools and proposing attendance boundaries for new schools, DSP shall consider a range of factors, including the following:

A. Capacities of Each of the Schools Involved in the Proposed Boundary Revisions

In considering whether to revise attendance boundaries at existing schools, DSP will consider the extent to which a school is overcrowded or underutilized. Where feasible, the goal is for elementary schools to be utilized at not more than eighty percent of design capacity, and for high schools at not more than one hundred percent of program capacity. Schools will be considered severely overcrowded if they are operating in excess of 100% utilization and significantly underutilized if they are less than thirty percent. DSP also shall consider these utilization rates when proposing revisions to attendance boundaries for existing schools and when proposing attendance boundaries for new schools.

B. Current and Projected Racial and Ethnic Composition of the Schools Affected

Where feasible, DSP shall propose establishing or revising attendance boundaries to maintain or promote stably desegregated enrollments in each of the affected schools and to avoid the creation of one-race schools.

C. Geographic Barriers

In proposing new or revised attendance boundaries, DSP shall consider geographical barriers so as to promote safety and minimize transportation burdens, to the extent feasible.

D. Travel Time and Distance

In proposing new or revised attendance boundaries, DSP will seek to minimize travel time and distance, to the extent feasible.

E. Program Considerations

In proposing new or revised boundaries, DSP shall consider the placement of programs, such as programs for English Language Learners and for special education students. In addition, DSP shall consider the impact of magnet schools and programs and the requirements of the *No Child Left Behind Act of 2001.*

III. Process

As necessary, DSP shall provide a report to the CEO regarding whether there is a need for changes to existing boundaries or for developing boundaries for new schools. For each proposed attendance boundary, DSP shall develop at least two alternatives. For each alternative, DSP shall prepare a report for the CEO showing three-year enrollment projections by racial/ethnic group for all schools affected by the proposed change pursuant to each alternative. The report shall document for each alternative the impact on the affected schools for the factors of capacity, geographic barriers, travel time and program considerations. In developing alternatives, DSP shall consider whether any feasible alternatives would better maintain or promote stably desegregated enrollments in each of the affected schools and/or better avoid the creation of one-race schools. The CEO shall review the report and may suggest additional alternatives.

As necessary, the CEO shall report to the Board if he/she is recommending any changes to existing boundaries and boundaries for new schools. If the CEO is recommending any changes to existing boundaries or any boundaries for new schools, the CEO will provide the Board with the report of the alternatives considered, including data on the factors of capacity, geographic barriers, travel time and program considerations and will recommend the alternative that is being recommended.

Prior to taking action on the establishment or revision of any attendance boundaries, the Board shall conduct public hearings on the proposed changes and the CEO's recommendation. Prior to the public hearing, the Board will make available data on the factors of capacity, geographic barriers, travel time and program considerations. In making its decision, the Board shall consider the factors of capacity, geographic barriers, travel time and distance and program considerations.

Amends/Rescinds: Amends 04-0526-PO4, Adopted 04-0526-PO4
Cross References:
Legal References:

CHICAGO PUBLIC SCHOOLS SPACE UTILIZATION STANDARDS

December 28, 2011

I. Executive Summary

A. Rationale and Importance for Space Utilization Standards

1. Education

It is important for CPS to codify space utilization standards so that it can clearly define what is adequate teaching and learning space within all of the school facilities it operates. These standards will help to ensure that all students have equal access to a learning environment that effectively supports strong instructional programs. At the early childhood, primary, intermediate, middle and high school levels, the foundation for success is a facility where the amount of existing space and its utilization enables the broad array of instructional programs available and is sufficient to accommodate superior new programs.

CPS is focused on introducing a capacity and space utilization methodology that principals, parents and guardians and community stakeholders can understand. Rather than narrowly prescribe the manner of classroom use, the standards were developed to promote flexibility and to ensure that the space can be programmed to fit student needs.

2. Operations

In an effort to achieve its educational goals, the space utilization standards will also help ensure that each school facility is utilized in a manner that improves efficiency, thereby ensuring that the district's limited resources are deployed and operated in an effective manner. Optimizing efficiency can only be accomplished when the district, in partnership with families, local school council members, and community agencies, can rely upon a comprehensive set of measurable indicators that portray the availability and usage of classrooms spaces.

B. Summary of P.A. 097-0474

On August 22, 2011, Governor Quinn signed Public Act 097-0474, amending the Illinois School Code by adding requirements for School Action and Facility Master Planning. Public Act 097-0474 requires that the Chicago Public Schools ("CPS") publish space utilization standards by January 1, 2012. Space utilization standards shall include:

(1) the method by which design capacity is calculated, including consideration of the requirements of elementary and secondary programs, shared campuses, after school programming, the facility needs, grade and age ranges of the attending students, and use of school buildings by governmental agencies and community organizations; (2) the method to determine efficient use of a school building based upon educational program design capacity; (3) the rate of utilization; and (4) the standards for overcrowding and underutilization.

105 ILCS 5/34-205 (a)(1)-(4).

CPS must also publish a space utilization report for each school building operated by CPS by December 31 of each year.

C. Summary of Standards

For elementary schools, CPS provides an enrollment efficiency range based primarily upon the total number of instructional classrooms available in the main/permanent school building. Each elementary school building is allotted a number of dedicated general education homeroom classrooms, equaling approximately 76% of the total classrooms available. Each elementary school building is also allotted a number of ancillary classrooms equal to approximately 24% of the total classrooms available. As an elementary school's enrollment increases above the efficiency range, a school may be considered overcrowded as programming options are reduced and/or compromised. As an elementary school's enrollment decreases below the efficiency range, a school may be considered underutilized as classrooms are unused and/or poorly programmed making the use of limited resources less effective.

For high schools, CPS provides an enrollment efficiency range based primarily upon the total number of instructional classrooms available in the main/permanent building. Each high school's design capacity, aka maximum capacity, is identified as function of the total number of instructional classrooms multiplied by 30. A high school's enrollment that remains within the 75-80% of design capacity is considered efficiently enrolled, while a high school's enrollment that decreases below 75% of design capacity is considered underutilized and a high school's enrollment that increases above 80% is considered overcrowded.

II. Core Concepts

A. Elementary Schools - Definitions

The proposed changes to the way the district calculates space utilization and capacity provides a greater level of detail and will allow principals to better align instructional programming to physical capacity. The new space utilization standards rely upon both familiar defined concepts from the historical methodology and new concepts defined below.

Maximum Capacity is defined as the number of classroom spaces designed as such in a given facility multiplied by 30.

Allotted Dedicated General Education Homerooms Classrooms ("*Allotted Homeroom Classrooms*") is defined as the number of classrooms spaces required for homeroom use derived as a consistent and adequate proportion of the total number of classrooms present in a given facility.

Allotted Ancillary Classrooms is defined as the number of classrooms spaces required for non-homeroom uses, such as science labs, computer labs, art rooms, music rooms, resource rooms,

special education rooms, governmental agencies and/or community organization special programs, after school programs, and other appropriate uses.

Ideal Program Enrollment is defined as allotted homerooms multiplied by 30[1].

Enrollment Efficiency is defined as an enrollment range defined as Ideal Enrollment less 20% to Ideal Enrollment plus 20%.

Overcrowded status is defined as an enrollment range greater than Enrollment Efficiency.

Underutilization is defined as an enrollment range less than Enrollment Efficiency.

The proposed space utilization standards for elementary school essentially creates a range of efficiency based primarily upon a school facility's total number of classrooms, estimated requirements for dedicated homeroom use, and estimated requirements for ancillary, non-dedicated homerooms use.

[1] See Board of Education of the City of Chicago Policy on Class Size 10-0615-PO1

B. Elementary Schools - Calculations

The baseline efficiency ranges are derived from the district's new construction prototype schools.

The prototype new construction school elementary school contains 39 classrooms: 30 dedicated general education homeroom classrooms and 9 ancillary classrooms. The 9 ancillary classrooms are generally programmed—though not required to be used—as 1 science room, 2 music/art rooms, 1 technology lab, 3 specialized education rooms, and 2 specialty classrooms.

The proportion of homeroom classrooms to ancillary classrooms in this example is roughly 3-to-1; 76.9% of total classrooms are allotted for homeroom use with remainder allotted to ancillary use.

The district will apply this proportion of homeroom-to-ancillary room use model to all elementary schools effective 2011-12 school year and plans to publish annually a list of all elementary schools with associated space use statistics referenced above by December 31 of each school year.

CPS finds this methodology to be consistent with approaches used by other K-12 school districts and resembles calculation strategies referenced by the Council of Educational Facility Planners International (CEFPI)[2].

[2] Calculating School Capacity: Local, State & National Perspectives, CEFPI Workshop, October 6, 2007

Total # of Classrooms Within Main Facility	# of Allotted Homeroom Classrooms[1]	# of Allotted Ancillary Classrooms[2]	Enrollment Efficiency Range			Maximum Facility Capacity Aka Design Capacity[4]
			-20% of Ideal	Ideal Program Enrollment[3]	+20% of Ideal	
26	20	6	480	600	720	780
39	30	9	720	900	1,080	1,170
52	40	12	960	1,200	1,440	1,560

[1] equal to 76.9% of Total # of Classrooms Within Main Facility

[2] equal to Total # of Classrooms Within Main Facility less # of Allotted Homeroom Classrooms

[3] equal to # of Allotted Homeroom Classrooms X 30

[4] equal to Total # of Classrooms Within Main Facility X 30

C. High Schools - Definitions

A completely departmentalized high school operates a different type of instructional program from most elementary schools and thus the space utilization standards for high schools must be different than those of elementary schools. While all high school students are generally assigned to homeroom classrooms, the homeroom class size is sometimes larger than the number of students assigned for regular instructional programs.

For high school facilities, CPS will establish both a Maximum Capacity—equal to the total number of instructional classrooms X 30—and an Ideal Enrollment range where total enrollment is 80% of Maximum Capacity.

CPS will also establish the same standard elementary school definition of enrollment efficiency range, where a school's enrollment efficiency is determined to be within +/- 20% of its ideal enrollment.

CPS finds this methodology to be consistent with approaches used by other K-12 school districts and resembles calculation strategies referenced by the Council of Educational Facility Planners International (CEFPI)[3].

[3] Calculating School Capacity: Local, State & National Perspectives, CEFPI Workshop, October 6, 2007

D. High Schools - Calculations

Total # of Classrooms Within Main Facility	Enrollment Efficiency Range			Maximum Facility Capacity Aka Design Capacity[1]
	-20% of Ideal	Ideal Program Enrollment[2]	+20% of Ideal	
30	576	720	864	900
50	960	1,200	1,440	1,500
70	1,344	1,680	2,016	2,100

[1] equal to Total # of Classrooms Within Main Facility X 30

[2] equal to 80% of Maximum Facility Capacity

E. Alternate Approaches

Alternate approaches were considered regarding model type. Some models make distinctions for different subject matter. The conclusion was that wide variability in program type does not make such a model dependable across the entire system

CPS finds the classroom-centric methodology on which the Guidelines are based to be significantly more sound and reliable than alternative models such as Building Gross Square Footage (GSF) models, where space utilization is measured on the basis of gross square footage per enrolled student. The conclusion was that wide variability among building types and ratios of non-instructional spaces to instructional spaces does not render an equitable or reliable measure of space utilization.

For example, School A and School B have identical gross square footages of 100,000 sq. ft. but School A has 43 classroom spaces and School B has 35 classroom spaces (School B may have wider hallways or a larger auditorium). Under the Building GSF model, these schools have equal capacity despite the significant difference in instructional spaces present in each building.

III. Other Circumstances

Main/Permanent Space vs. Temporary Space

CPS defines Main/Permanent Space as classrooms present within a CPS Board-owned structure built with a fixed foundation that has permanently attached walls, roof, and floor that cannot be moved or transported either as a unit or in sections. Approximately 85 schools supplement permanent capacity with temporary capacity, typically in the form of modular classroom units or leased facilities. While these temporary classrooms are necessary in most cases to prevent overcrowding, they are not incorporated into the school's total classroom count for the purpose of establishing Ideal Enrollment.

Sharing Space

A co-location is where two or more school units co-share a single facility. In co-location facilities, efficiency is achieved when each elementary school has access to the appropriate number of allotted homerooms and ancillary classrooms as determined by its enrollment. For high schools efficiency is achieved when each high school has access to the appropriate number of total classrooms as determined by its enrollment. Identification of schools' room uses in co-location facilities is required by the Shared Facility Policy (05-0126-PO1).

This is accomplished by assigning to each school the appropriate proportion of total classroom spaces available according to the proportion of students enrolled. For example, in a 50-classroom facility shared by two schools where School A's enrollment is 600 and School B's enrollment is 300, the total number of classrooms available to School A is 33 and the total number of classrooms available to School B is 17. Homeroom and ancillary classroom allotments are than established in accordance with the existing methodology.

In-Area Enrollment vis-a-vis Out-of-Area Enrollment

For elementary and high schools with traditional geographic attendance area boundaries (e.g., neighborhood schools), CPS is compelled to measure the school's actual enrollment efficiency, based on total enrollment relative to capacity, as well as the school's notional enrollment efficiency, based on the percentage of enrollment consisting of students residing within that school's attendance area boundary. As explained further in Appendix A, the notional enrollment efficiency rating assists the District in determining the extent to which a neighborhood school's efficiency or inefficiency relates to a high or low number of out-of-area students enrolled relative to the facility's capacity.

II. Space Utilization for Each School Building

A list of the space utilization assessments for each school will be provided once enrollment data for the 2011-2012 school year has been finalized.

III. Conclusion

The Chicago Public Schools Space Utilization Standards and school-by-school reports will be published annually after 20th Day enrollment data is available and before December 31st of each year. These reports, which identify the ideal enrollment capacities of all Board-operated public school facilities compared to school enrollment, will better enable principals, community members, and district leadership to render solid decisions concerning the allocation of building space to meet all schools' instructional program needs.

Appendix A

Key School Demographics Statistics and Indicators

For the statistics and diagrams identified below, six examples are used to help explain the meaningful relationships between school demographics and enrollment efficiency.

Example - School A

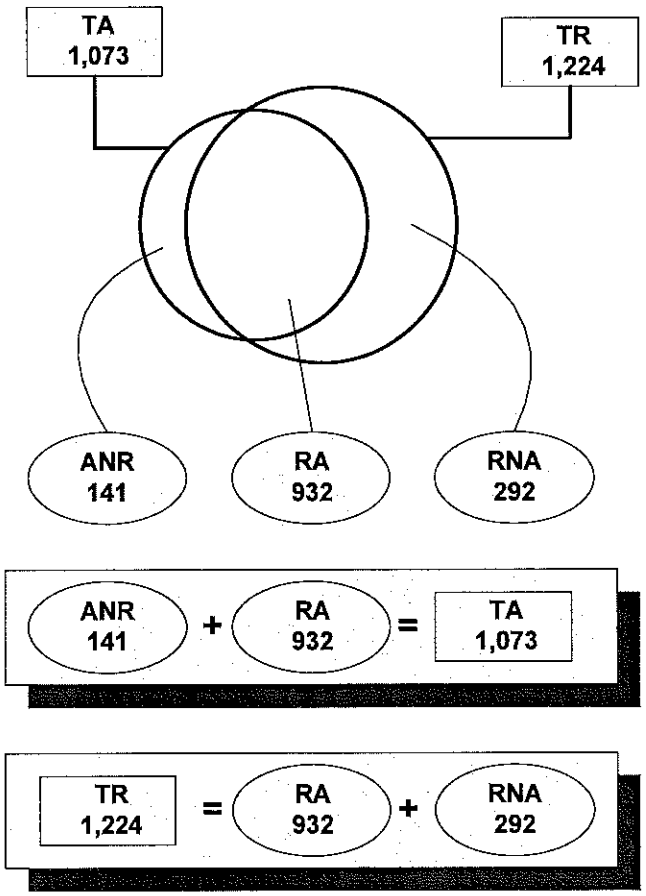

Total Attending (TA) aka "Enrollment": The total number of students enrolled in School A is 1,073.

Total Residing (TR): The total number of public school elementary school students (grades PK-8) residing within School A's attendance boundary is 1,224.

Residing and Attending (RA): The total number of students that reside INSIDE School A's attendance area and are enrolled in School A is 932. These students are commonly referred to as "in-area" students and can be expressed either as a percentage of School A's enrollment (87%) or as a percentage of TR (76%).

Attending, Not Residing (ANR): The total number of students that reside OUTSIDE of School A's attendance area and are enrolled in School A is 141. These students are commonly referred to as "out-of-area" students and can be expressed as a percentage of School A's enrollment (13%).

Residing, Not Attending (RNA): The total number of students that reside inside of School A's attendance area and are NOT enrolled in School A is 292. These students are commonly referred to as "choice out" students and can be expressed as a percentage of School A's TR (24%).

In this example, School A's design capacity is 1,440 and ideal enrollment is 1,034. Because School A's enrollment is 1,073, the actual enrollment efficiency rating for this school is +4% (efficiently enrolled-actual).

School A's notional enrollment efficiency rating is calculated by replacing the school's enrollment by RA, that is, the in-area students enrolled in School A. Because School A's RA is 932, the notional enrollment efficiency rating for this school is -10% (efficiently enrolled-notional).

Design Capacity	Ideal Enrollment	Efficiency Range	Total Enrollment	Actual Utilization	In-Area Enrollment	Notional Utilization
1,440	1,034	827 – 1,241	1,073	+04% Above Ideal	932	-10% Below Ideal

Because both actual and notional efficiency ratings fall within the range of +/-20%, **School A is determined to be efficiently enrolled regardless** of whether the District gauges actual utilization or notional utilization. In such cases, the District finds that the presence of a relatively small number of out-of-area students enrolled relative to the facility's capacity has little to no bearing on the utilization of the school.

Example – School B

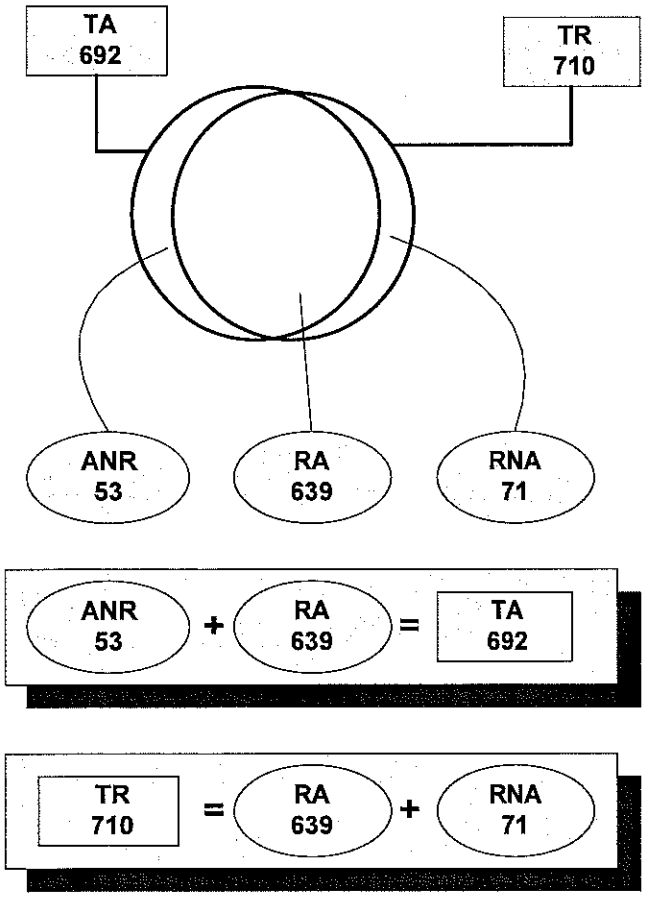

Total Attending (TA) aka "Enrollment": The total number of students enrolled in School B is 692.

Total Residing (TR): The total number of public school elementary school students (grades PK-8) residing within School B's attendance boundary is 710.

Residing and Attending (RA): The total number of students that reside INSIDE School B's attendance area and are enrolled in School B is 639. These students are commonly referred to as "in-area" students and can be expressed either as a percentage of School B's enrollment (92%) or as a percentage of TR (90%).

Attending, Not Residing (ANR): The total number of students that reside OUTSIDE of School B's attendance area and are enrolled in School B is 53. These students are commonly referred to as "out-of-area" students and can be expressed as a percentage of School B's enrollment (8%).

Residing, Not Attending (RNA): The total number of students that reside inside of School B's attendance area and are NOT enrolled in School B is 71. These students are commonly referred to as "choice out" students and can be expressed as a percentage of School B's TR (10%).

In this example, School B's design capacity is 660 and ideal enrollment is 474. Because School B's enrollment is 692, the actual enrollment efficiency rating for this school is +46% (overcrowded-actual).

School B's notional enrollment efficiency rating is calculated by replacing the school's enrollment by RA, that is, the in-area students enrolled in School B. Because School B's RA is 639, the notional enrollment efficiency rating for this school is +35% (overcrowded-notional).

Design Capacity	Ideal Enrollment	Efficiency Range	Total Enrollment	Actual Utilization	In-Area Enrollment	Notional Utilization
660	474	379 – 569	692	+46% Above Ideal	639	+35% Above Ideal

Because both actual and notional efficiency ratings fall well outside the range of +/-20%, **School B is determined to be overcrowded regardless** of whether the District gauges actual utilization or notional utilization. In such cases, the District finds that the presence of a relatively small number of out-of-area students enrolled relative to the facility's capacity is little to no bearing on the overcrowded status of the school.

Example – School C

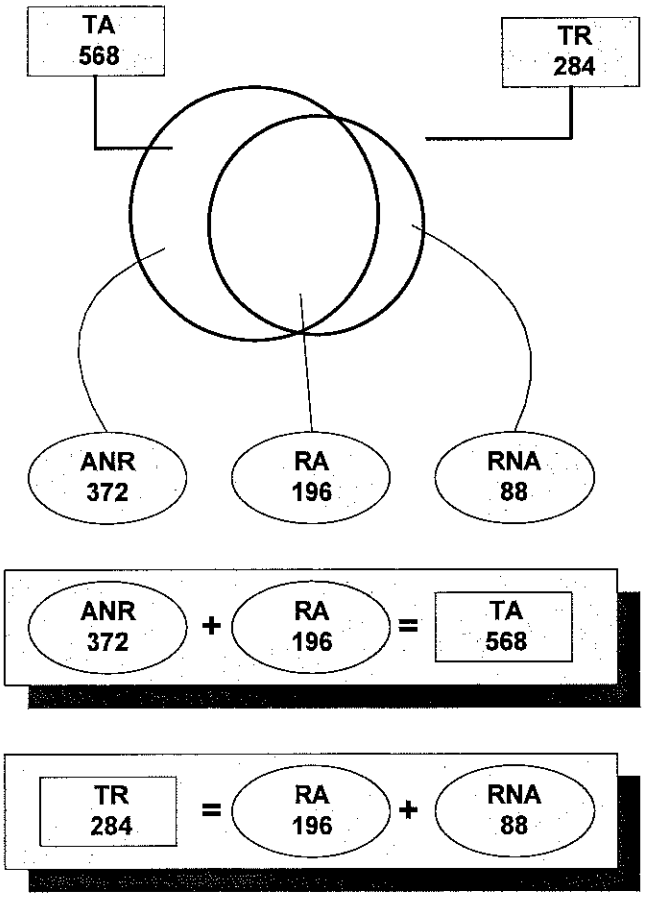

Total Attending (TA) aka "Enrollment": The total number of students enrolled in School C is 568.

Total Residing (TR): The total number of public school elementary school students (grades PK-8) residing within School C's attendance boundary is 284.

Residing and Attending (RA): The total number of students that reside INSIDE School C's attendance area and are enrolled in School C is 196. These students are commonly referred to as "in-area" students and can be expressed either as a percentage of School C's enrollment (35%) or as a percentage of TR (69%).

Attending, Not Residing (ANR): The total number of students that reside OUTSIDE of School C's attendance area and are enrolled in School C is 372. These students are commonly referred to as "out-of-area" students and can be expressed as a percentage of School C's enrollment (65%).

Residing, Not Attending (RNA): The total number of students that reside inside of School C's attendance area and are NOT enrolled in School C is 88. These students are commonly referred to as "choice out" students and can be expressed as a percentage of School C's TR (31%).

In this example, School C's design capacity is 570 and ideal enrollment is 409. Because School C's enrollment is 568, the actual enrollment efficiency rating for this school is +39% (overcrowded-actual).

School C's notional enrollment efficiency rating is calculated by replacing the school's enrollment by RA, that is, the in-area students enrolled in School C. Because School C's RA is 196, the notional enrollment efficiency rating for this school is -52% (underutilized-notional).

Design Capacity	Ideal Enrollment	Efficiency Range	Total Enrollment	Actual Utilization	In-Area Enrollment	Notional Utilization
570	409	327 – 491	568	+39% Above Ideal	196	-52% Below Ideal

Because actual and notional efficiency ratings yield two different statuses, both outside the range of +/- 20%, **School C is determined to be actually overcrowded yet notionally underutilized.**

In such cases, the District finds that the presence of a relatively large number of out-of-area students enrolled relative to the facility's capacity has a meaningfully negative impact on the utilization of the school.

Example – School D

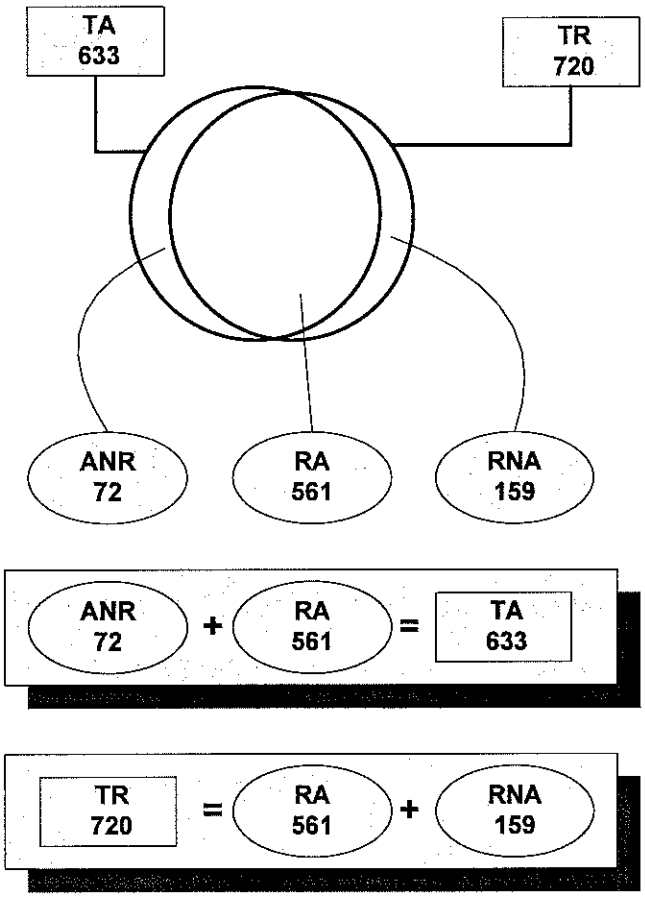

Total Attending (TA) aka "Enrollment": The total number of students enrolled in School D is 633.

Total Residing (TR): The total number of public school elementary school students (grades PK-8) residing within School D's attendance boundary is 720.

Residing and Attending (RA): The total number of students that reside INSIDE School D's attendance area and are enrolled in School D is 561. These students are commonly referred to as "in-area" students and can be expressed either as a percentage of School D's enrollment (89%) or as a percentage of TR (78%).

Attending, Not Residing (ANR): The total number of students that reside OUTSIDE of School D's attendance area and are enrolled in School D is 72. These students are commonly referred to as "out-of-area" students and can be expressed as a percentage of School D's enrollment (11%).

Residing, Not Attending (RNA): The total number of students that reside inside of School D's attendance area and are NOT enrolled in School D is 159. These students are commonly referred to as "choice out" students and can be expressed as a percentage of School D's TR (22%).

In this example, School D's design capacity is 690 ideal enrollment is 495. Because School D's enrollment is 633, the actual enrollment efficiency rating for this school is +28% (overcrowded-actual).

School D's notional enrollment efficiency rating is calculated by replacing the school's enrollment by RA, that is, the in-area students enrolled in School D. Because School D's RA is 561, the notional enrollment efficiency rating for this school is +13% (efficiently enrolled-notional).

Design Capacity	Ideal Enrollment	Efficiency Range	Total Enrollment	Actual Utilization	In-Area Enrollment	Notional Utilization
690	495	396 – 594	633	+28% Above Ideal	196	+13% Above Ideal

Because actual and notional efficiency ratings yield two different statuses, the former outside the range of +/-20% and the latter within, **School D is determined to be actually overcrowded yet notionally efficiently enrolled.**

In such cases, the District finds that the presence of a relatively large number of out-of-area students enrolled relative to the facility's capacity has a meaningful negative impact on the utilization of the school.

Example – School E

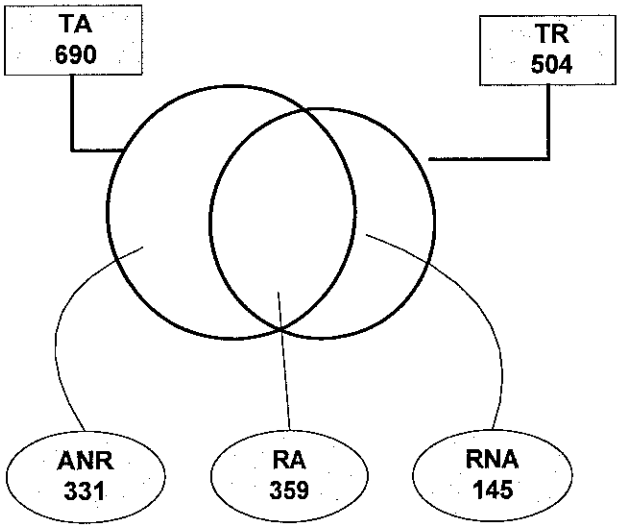

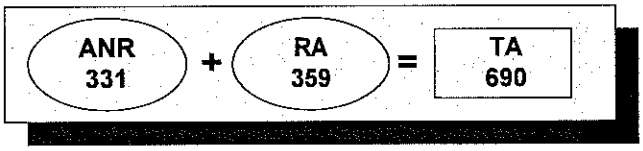

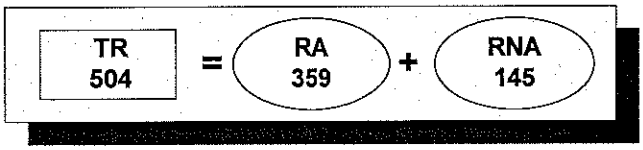

Total Attending (TA) aka "Enrollment": The total number of students enrolled in School E is 690.

Total Residing (TR): The total number of public school elementary school students (grades PK-8) residing within School E's attendance boundary is 504.

Residing and Attending (RA): The total number of students that reside INSIDE School E's attendance area and are enrolled in School E is 359. These students are commonly referred to as "in-area" students and can be expressed either as a percentage of School E's enrollment (52%) or as a percentage of TR (71%).

Attending, Not Residing (ANR): The total number of students that reside OUTSIDE of School E's attendance area and are enrolled in School E is 331. These students are commonly referred to as "out-of-area" students and can be expressed as a percentage of School E's enrollment (48%).

Residing, Not Attending (RNA): The total number of students that reside inside of School E's attendance area and are NOT enrolled in School E is 145. These students are commonly referred to as "choice out" students and can be expressed as a percentage of School E's TR (29%).

In this example, School E's design capacity is 915 and ideal enrollment is 657. Because School E's enrollment is 690, the actual enrollment efficiency rating for this school is +5% (efficiently enrolled-actual).

School E's notional enrollment efficiency rating is calculated by replacing the school's enrollment by RA, that is, the in-area students enrolled in School E. Because School E's RA is 326, the notional enrollment efficiency rating for this school is -35% (underutilized-notional).

Design Capacity	Ideal Enrollment	Efficiency Range	Total Enrollment	Actual Utilization	In-Area Enrollment	Notional Utilization
915	657	526 – 788	690	+5% Above Ideal	359	-45% Below Ideal

Because actual and notional efficiency ratings yield two different statuses, the former within the range of +/-20% and the latter outside, **School E is determined to be actually efficiently enrolled yet notionally underutilized.**

In such cases, the District finds that the presence of a relatively large number of out-of-area students enrolled relative to the facility's capacity has a meaningfully positive impact on the utilization of the school as long as the school remains efficiently enrolled.

Example - School F

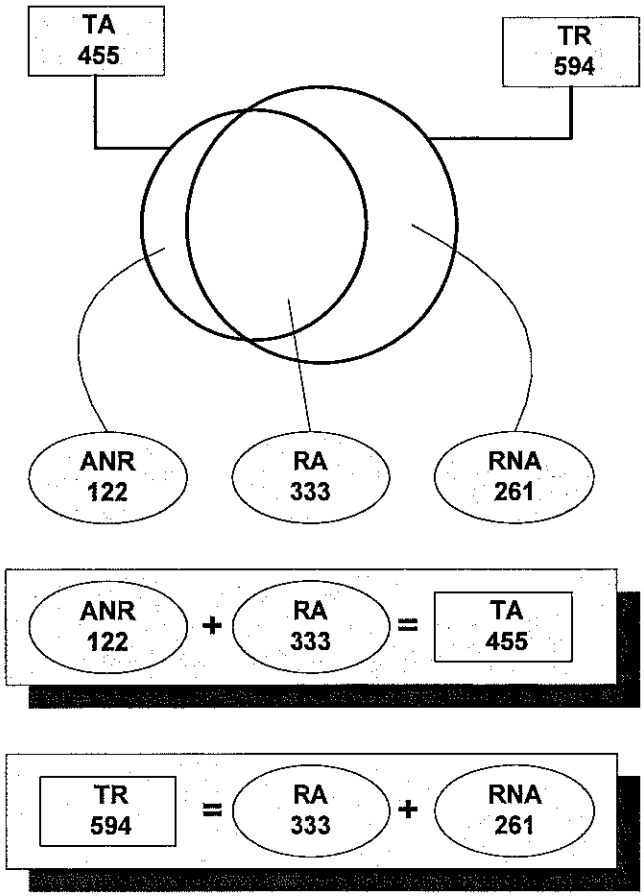

Total Attending (TA) aka "Enrollment": The total number of students enrolled in School F is 455.

Total Residing (TR): The total number of public school elementary school students (grades PK-8) residing within School F's attendance boundary is 594.

Residing and Attending (RA): The total number of students that reside INSIDE School F's attendance area and are enrolled in School F is 333. These students are commonly referred to as "in-area" students and can be expressed either as a percentage of School F's enrollment (73%) or as a percentage of TR (56%).

Attending, Not Residing (ANR): The total number of students that reside OUTSIDE of School F's attendance area and are enrolled in School F is 122. These students are commonly referred to as "out-of-area" students and can be expressed as a percentage of School F's enrollment (27%).

Residing, Not Attending (RNA): The total number of students that reside inside of School F's attendance area and are NOT enrolled in School F is 261. These students are commonly referred to as "choice out" students and can be expressed as a percentage of School F's TR (44%).

In this example, School F's design capacity is 1,200 and ideal enrollment is 861. Because School F's enrollment is 455, the actual enrollment efficiency rating for this school is -47% (underutilized-actual).

School F's notional enrollment efficiency rating is calculated by replacing the school's enrollment by RA, that is, the in-area students enrolled in School F. Because School F's RA is 333, the notional enrollment efficiency rating for this school is -62% (underutilized-notional).

Design Capacity	Ideal Enrollment	Efficiency Range	Total Enrollment	Actual Utilization	In-Area Enrollment	Notional Utilization
1,200	861	689 – 1,033	455	-47% Below Ideal	333	-61% Below Ideal

Because both actual and notional efficiency ratings fall outside the range of +/-20%, **School F is determined to be underutilized regardless** of whether the District gauges actual utilization or notional utilization. In such cases, the District finds that the presence of a relatively small or large number of out-of-area students enrolled relative to the facility's capacity has little to no bearing on the underutilization the school.

Summary

As the District proposes to establish standard (actual) efficiency ratings for all elementary schools, to help better portray the relationship between school demographics (in-area vs. out-of-area enrolled) and utilization, the District further proposes to establish notional efficiency ratings in addition to standard efficiency ratings for all elementary schools with established traditional geographic attendance boundaries (e.g., neighborhood elementary schools).

For all neighborhood elementary schools one of the following six status ratings is possible:

1. Efficiently enrolled-actual / efficiently enrolled-notional [Example –School A]
2. Overcrowded-actual / overcrowded-notional [Example –School B]
3. Overcrowded-actual / underutilized-notional [Example –School C]
4. Overcrowded-actual / efficiently enrolled-notional [Example—School D]
5. Efficiently enrolled / underutilized-notional [Example—School E]

6. Underutilized-actual / underutilized-notional [Example—School F]

GUIDELINES FOR SCHOOL ACTIONS[1]
2012-2013 SCHOOL YEAR
("Guidelines")

Chicago Public Schools' ("CPS") Chief Executive Officer ("CEO") publishes the following Guidelines to help the public and all interested stakeholders understand the criteria for school actions. CPS is committed to providing every child in every community with access to a high quality education that prepares them for college and career. To that end, CPS must take every step possible to focus our resources on investments that will improve schools for all students. School action proposals will be presented to the Chicago Board of Education ("Board") to help CPS meet this commitment to all its students so that they may access higher quality school options. All proposals presented to the Board for consideration will reflect a commitment to provide impacted students with the option to enroll in a higher performing school.

For the 2012-2013 school year, the CEO will consider the criteria specified below when recommending any of the following school actions:

- closure,
- consolidation,
- reassignment boundary change,
- phase-out, or
- co-location.

I. CRITERIA

A. Criteria for Closure, Consolidation, Reassignment Boundary Change, or Phase-Out

The CEO may propose a closure, consolidation, reassignment boundary change or phase-out using the criteria outlined below.

1. Space Utilization or Grade Alignment

Space Utilization
A school may be considered for a closure, consolidation, reassignment boundary change, or phase-out if it is underutilized or overcrowded based on CPS' Space Utilization Standards and student enrollment numbers recorded on the 20th attendance day for the 2012-2013 school year.

Grade Alignment
A school may be considered for a closure, consolidation, reassignment boundary change, or phase-out if two elementary schools, sharing some part of each other's attendance area, individually offer less than Kindergarten through eighth grades and can be reconfigured to a single Kindergarten through eighth grade school.

2. Constraining Factors

[1] Issuing these Guidelines is consistent with the Illinois School Code (105 ILCS 5/34-230) requiring that the CEO publish guidelines outlining the criteria for school actions.

The CEO may only propose a closure, consolidation, or reassignment boundary change if:

(a) the students impacted by a closure, consolidation, or reassignment boundary change have the option to enroll in a higher performing school; and,
(b) the resulting space utilization after closure, consolidation, or reassignment boundary change will not exceed the facility's enrollment efficiency range as defined by the CPS' Space Utilization Standards.

The CEO may only propose a phase-out if the resulting space utilization after considering a closure, consolidation, or reassignment boundary change would exceed the contemplated receiving facility's enrollment efficiency range as defined by the CPS' Space Utilization Standards.

3. Additional Information to Consider

In determining whether to propose a closure, consolidation, reassignment boundary change, or phase-out, the CEO may consider other information including, but not limited to: safety and security, school culture and climate, school leadership, quality of the school facility, school type and programming, family and community feedback received throughout the school year independent from the process described below, analysis of transition planning costs, neighborhood development plans, whether the school has recently been affected by any school actions, changes in academic focus or actions taken pursuant to 105 ILCS 5/34-8.3, or proximity, capacity and performance of other schools in the community.

B. Criteria for Co-location

The CEO may propose a co-location of two schools within the same facility if:

(1) the combined projected enrollment is within the facility's enrollment efficiency range as defined by the CPS' Space Utilization Standards; and
(2) the facility can support the academic programming of both schools.

Furthermore, in determining whether to propose a co-location, the CEO may consider other information, including, but not limited to: safety and security, school culture and climate, school leadership, quality of the facility, and an analysis of transition planning costs.

II. NOTICE AND SCHOOL TRANSITION PLANS

Notice of any proposed school action will be provided to the principal, staff, local school council, parents or guardians, Illinois State Senator, Illinois State Representative, and Alderman for the school or schools that are subject to the proposed school action. Notice will include the date, time, and place of public meetings being held to elicit public comment on the proposal.

Along with notice of the CEO's proposal, the CEO will issue a draft school transition plan dependent on the unique circumstances of the proposed school action. The draft school transition plan will include, but is not limited to, the following: (1) services to support the academic, social, and emotional needs of students; supports for students with disabilities, homeless students, and English language learners; and support to address security and safety

issues; (2) options to enroll in higher performing schools; (3) informational briefings regarding the choice of schools that include all pertinent information to enable the parent or guardian and child to make an informed choice, including the option to visit the schools of choice prior to making a decision; and (4) the provision of appropriate transportation where practicable.

III. DEFINITIONS

"Closing" or "closure" means closing a school and assigning all of the students enrolled at that school to one or more designated receiving schools.

"Co-location" means two separate, independent schools with their own school leader(s) co-existing within a Chicago Public School facility.

"Consolidation" means the consolidation of two or more schools by closing one or more schools and reassigning the students to another school.

"Higher performing school" means:

(1) receiving a higher level on the Performance Policy for the 2011-2012 school year, or
(2) if the 2011-2012 school year level on the Performance Policy is equal, higher performing means performing higher on the majority of the following metrics:
- for elementary schools – for the 2011-2012 school year, percentage of points on the Performance Policy, ISAT composite meets or exceeds score, Value Added reading, and Value Added math,
- for high schools – for the 2011-2012 school year, percentage of points on the Performance Policy, PSAE composite meets or exceeds score, EPAS gains percentile in reading, and EPAS gains percentile in math, or

(3) for elementary schools, if the 2011-2012 school year level on the Performance Policy is equal and the school does not have Value Added metrics, higher performing means a higher percentage of points on the Performance Policy and a higher ISAT meets or exceeds score for the 2011-2012 school year, or
(4) for high schools, if the 2011-2012 school year level on the Performance Policy is equal and the school does not have EPAS metrics, higher performing means a higher percentage of points on the Performance Policy and a higher PSAE composite meets or exceeds score.

"ISAT" stands for Illinois Standard Achievement Test.

"ISAT composite" means the score of the combined ISAT reading, math and science tests.

"EPAS" stands for Educational Planning and Assessment System and includes the EXPLORE test for freshmen, the PLAN test for sophomores, and the ACT test for juniors.

"Performance Policy" means the Board of Education of the City of Chicago's School Performance, Remediation and Probation Policy, 12-0725-PO2, establishing standards and criteria for placing a school on Remediation or Probation for the 2012-2013 school year based on assessments administered in Spring 2012 and other performance data from prior school years.

The score and status are determined by evaluating key indicators that assess a school's current performance, trend over time and student growth.

"Phase-out" means the gradual cessation of enrollment in certain grades each school year until a school closes or is consolidated with another school.

"PSAE" stands for Prairie State Achievement Examination.

"Reassignment boundary change" means an attendance area boundary change that involves the reassignment of currently enrolled students.

"School action" means any school closing; school consolidation; co-location; boundary change that requires reassignment of students, unless the reassignment is to a new school with an attendance area boundary and is made to relieve overcrowding; or phase-out.

"Space Utilization Standards" mean the Chicago Public Schools' Space Utilization Standards, found at: http://www.cps.edu/About_CPS/Policies_and_guidelines/Documents/SpaceUtilizationStandards.pdf, establishing standards for determining enrollment efficiency, overcrowding, and underutilization.

"Value Added" means the metric that assesses school effects on students' academic growth, controlling for student characteristics (including, but not limited to, student mobility rates, poverty rates, special education status and bilingual education status), grade level, and prior performance through a regression methodology. Academic growth is measured by the change in scale score points on the ISAT from one year to the next.

END OF DOCUMENT

THE CHICAGO PUBLIC SCHOOLS

OFFICE OF THE CHIEF EXECUTIVE OFFICER

PROCEDURES FOR PUBLIC HEARINGS ON PROPOSED SCHOOL CLOSURE, CONSOLIDATION, CO-LOCATION, PHASE-OUT, OR REASSIGNMENT BOUNDARY CHANGE

1. Upon considering to recommend to the Chicago Board of Education ("Board") that a school be closed, consolidated, co-located, phased-out, or subject to reassignment boundary change, an independent hearing officer shall be appointed consistent with 105 ILCS 5/34-230(f) to conduct a public hearing.
   a. The hearing will commence and conclude at the time designated in the notice of hearing;
   b. The hearing will be transcribed; and
   c. The hearing officer will be solely responsible for conducting the hearing and will conduct the hearing in an efficient and impartial manner.

2. Chief Executive Officer's Presentation
   a. An attorney will present the Chief Executive Officer's proposal by making an opening statement and submitting evidence in support of the proposal to be considered by the hearing officer.
   b. The attorney may also introduce witnesses, who will present statements regarding the proposal. The hearing officer may ask the witnesses questions to clarify any statements they make.

3. Public Participation
   a. The hearing officer will receive relevant statements, comments, documents or written proposals from members of the public. Written comments will be accepted at the hearing, hearing registration table, and on the next business day, before 5:00p.m., if delivered by hand to the CPS Law Department (125 S. Clark, Suite 700) or electronic mail (Qualityschools@cps.edu).
   b. All those wishing to comment on the matter being considered will be required to sign up to do so as provided in the notice of hearing.
      i. Registration must be made in person by the individual who will be commenting on the proposal; and
      ii. An individual may not sign in to speak on behalf of another person.
   c. The number of individuals in each hearing room will be limited based on room capacity.
   d. The hearing officer will determine the order of speakers.
   e. When called by the hearing officer to speak, the speaker shall proceed promptly to the microphone area where s/he will have two minutes to present his/her remarks and materials to the hearing officer.
   f. The total number of people speaking at the hearing will be subject to the sole discretion of the hearing officer.
   g. The hearing officer and the Board's Office of Safety and Security may impose any other reasonable procedures or limitations necessary to ensure that the proceedings are orderly and efficient.
   h. Courteous, respectful, and civil behavior is expected from all speakers and all people attending a hearing. Disruptive individuals may be removed from the hearing.

4. Hearing Officer's Written Report
   a. Following the hearing, the hearing officer will prepare and submit to the Chief Executive Officer a written report summarizing the public comments and the documents received at the hearing.
   b. The hearing officer's report will also determine whether the Chief Executive Officer complied with the requirements of 105 ILCS 5/34-230 and the Chief Executive Officer's Guidelines for School Actions.

ORIGINAL

CHICAGO PUBLIC SCHOOLS

For the Proposed Closure of Stockton Elementary (Sending) and Courtenay Elementary (Welcoming at 4420 North Beacon Street)

Public Hearing

STENOGRAPHIC REPORT OF PROCEEDINGS had in the above-entitled matter held on April 8th, 2013, at Amundsen High School, Chicago, Illinois, commencing at 7:30 p.m., and concluding at 9:30 p.m.

CPS STAFF MEMBERS PRESENT:

MR. TIM CAWLEY - Presenter,
Chief Administrative Officer

MR. SEBASTIEN DE LONGEAUX - Facilitator,
Chief Procurement Officer

ALSO PRESENT:

MR. CRAIG BENES - Chief of Schools
- Ravenswood Ridge Network

MR. PHIL SALEMI - Deputy Chief of Schools
- Ravenswood Ridge Network

Reported By: Sandra Di Vito, CSR

License No.: 084-004642

McCorkle Litigation Services, Inc.
Chicago, Illinois (312) 263-0052

SPEAKERS

* Ms. Catherine Humphreys	15
* Ms. Wendy Auffant	17
Ms. Christine Clark	19
Mr. Joshua Keesecker	22
Ms. Theresa Fernandez	24
Ms. Debby Pope	24
Mr. Keti Tuthorn	26
* Ms. Vivian Assumpaco	29
Ms. Diane Horwitz	31
Ms. Claudia Pesenti	34
Ms. Christine Clancy	36
Ms. Brooke Gard	38
Mr. Steven Serikaku	40
Ms. Karen Zaccor	41
Mr. Marc Kaplan	43
Mr. Tim Furman	45
Ms. Miriam Socoloff	47
Mr. Michael Presser	49
Ms. Lois Jones	51
Ms. Diane Lyman	53
Mr. Jesus Gonzalez	54
Ms. Brenda Shiller	55
Ms. Risa Hynes	57

1 SPEAKERS CONTINUED

2 Mr. Derek Bridges 58

3 Ms. Maria Galicia 61

4

5

6 * - Submitted hard copy testimony

7

8

9

10

11

12

13

14

15

16

17

18

19

20

21

22

23

24

1 (Whereupon, the following
2 proceedings commenced at
3 7:30 p.m.:)
4 MR. CAWLEY: Good evening, ladies and
5 gentlemen. It's 7:30 p.m., so we'd like to get
6 started.
7 Before we do, we would like to see if
8 there's anyone in the audience who requires
9 signing or Spanish translation, so let me
10 actually have that question asked in Spanish.
11 Spanish.
12 (Spanish language.)
13 MR. CAWLEY: Okay. So, we do have a Spanish.
14 Do we have anybody who would -- who
15 needs sign language?
16 Okay. If we could just be sure as new
17 people register that that is checked because we
18 would ask them to come up then, we don't want
19 anybody to be left out, okay? Thank you, very
20 much.
21 Good evening. My name is Tim Cawley,
22 and I'm the Chief Administrative Officer for
23 Chicago Public Schools.
24 Oh, what they're going to do is to come

1 sit near you rather than take extended time
2 translating everything that I say for everybody.
3 I hope that's okay.
4 And, again, if there are any other --
5 any other guests who need Spanish language
6 translation, we should make sure that we know,
7 okay, thank you.
8 (Whereupon, a discussion was had
9 off the record.)
10 MR. CAWLEY: So, let me continue on with this
11 evening's presentation. So, I want to welcome
12 you all here. We are here to discuss the school
13 action of closing the Courtenay School --
14 closing the Stockton School into Courtenay and
15 then relocating Courtenay to the Stockton
16 building.
17 The -- the purpose of this evening's
18 meeting is to get input from the community and
19 we have a process for doing that. And my
20 colleague, Sebastien De Longeaux, will explain
21 that process momentarily. Sebastien is a Chief
22 Procurement Officer for Chicago Public Schools.
23 With us tonight, also, is our Network
24 Chief and the Deputy Chief for the Network of

1 Schools that encompasses both Stockton and
2 Courtenay, Craig Benes and Phil Salemi, who are
3 here in front.
4 We're, also -- also, happy to say that
5 we have Commander Elias Voulgaris from the
6 Chicago Police Department who's here out of --
7 to show the partnership that we've got with CPD
8 since the safety of our students has been the
9 No. 1 criterion as we've gone through our
10 discussions on these and the police have been a
11 great partner, they always are for us at the
12 schools, and the Commander has worked with our
13 teams to help make sure that we've got the right
14 safety plans here.
15 I'm particularly happy to let you know
16 tonight that one of the -- the Board Members for
17 Chicago Public Schools, Carlos Azcoitia, is here
18 this evening as well to hear your comments and
19 to take your feedback back to the rest of the
20 Board. In fact, that is what tonight is all
21 about, to take your feedback back to
22 CEO Barbara Byrd-Bennett and the Board.
23 This process has been going on for four
24 months. And during that time, we have heard

1 from 20,000 of your fellow citizens in Chicago,
2 and this is a continuation of that process.
3 And to help with that bringing the
4 message back, we have a court reporter and a
5 note taker from the Network Office who will
6 summarize the key points and to make sure that
7 we've got accurate transcripts and good
8 summaries that will go to Dr. Byrd-Bennett and
9 the Board Members as early as tomorrow, they're
10 summarizing every day and getting them at least
11 to Dr. Byrd-Bennett the following day.
12 Excuse me, as I said, this process is
13 designed to get your input, so we will be
14 welcoming your comments here. We will not be
15 answering questions this evening, because this
16 is meant to be your time to talk to us and to
17 communicate to the Members of the Board.
18 But we have wanted to inform you in the
19 best way that we could with the key facts about
20 what is being proposed to the Board for a vote
21 at the May 22nd Board Meeting. And between now
22 and then, there are two more opportunities for
23 this action to receive public input. On
24 Thursday evening, two days from now -- three

1 days from now, we will be back here, same time,
2 7:30 p.m., in this auditorium for additional
3 meeting, and then there's a public hearing down
4 at the -- at 125 South Clark, the Board of Ed,
5 at 8:00 p.m. on Tuesday, April 16th. And that
6 hearing will be overseen by a public official.
7 So, there are two more opportunities after
8 tonight.
9 But to give you the information,
10 there's a lot on our website, as you know,
11 there's been a lot in the media releases, but
12 this handout has the key things for you and is
13 the main information source for this evening.
14 And let me just orient you to this very briefly.
15 On the first page, obviously, there's a
16 map showing the two schools, and I'm sure you're
17 very familiar with where they're located. To
18 the left of the map is a summary for why
19 Stockton is being closed reflecting the
20 underutilization of the building and the decline
21 in the enrollment.
22 And on the right side, an explanation
23 of what Courtenay offers as a welcoming school.
24 It's a higher level school with a number of

1 programs that are not currently at Stockton.
2 And, then, an indication that Courtenay would be
3 relocated to the Stockton building since it is a
4 far superior building with much better
5 resources.
6 At the bottom, there's a summary, also,
7 about how this process is worked and what we've
8 gone through over the last four months on this.
9 On the back of the first page is,
10 again, the description of what the action is,
11 that the current Stockton students will be
12 enrolled at Courtenay, and that Courtenay will
13 be relocated over to the building that's
14 currently occupied by Stockton. So, students
15 from both schools will be in that building under
16 the leadership of the Courtenay administration.
17 The tenant boundaries are shown on a
18 map on the last page, the very last page of the
19 handout, but there's other information on the
20 second page which is very helpful to you.
21 Parents have enrollment options. If
22 they would like to explore other CPS schools,
23 there's a summary here for where you would go to
24 find information for those options.

1 We, also, have mentioned that we've
2 worked so closely with safety and security, our
3 own safety and security team, again, working
4 with the Commander and the Chicago Police
5 Department throughout the city, and that we will
6 be providing safe passage support for the
7 students as they walk to the new Courtenay
8 School in the Stockton building. So, the Safe
9 Passage Program is something that we've provided
10 to high schools in the past and we will now be
11 expanding that to elementary schools that are
12 going through these transitions.
13 There's a brief summary here of what
14 happens to teachers and there's a goal of having
15 the teachers follow their students, and that was
16 actually written into the CTU contract this past
17 year in anticipation of the actions that have
18 been proposed.
19 The LSC at Stockton would close at the
20 end of the school year as indicated here and
21 then any partnerships with community
22 organizations from Stockton or Courtenay would
23 be nurtured and brought together in the new
24 Courtenay next year.

1 On the third page, you can see the
2 investments that we're making to make this
3 transition go as well as it possibly can.
4 Now, somebody brought up at the last
5 meeting that we had that CPS has a financial
6 challenge, so to say, and it certainly does, but
7 by consolidating schools, it allows us to bring
8 resources together in one school in a way that
9 we couldn't when we had many more schools
10 throughout the city. So, we are actually
11 funding the investments in the new schools with
12 the savings from not operating so many half full
13 buildings.
14 And on this third page, you can see
15 what some of those investments are. I mentioned
16 safe passage, there'll be, also, additional
17 security personnel inside the building. But,
18 also, a facility in capital improvements.
19 Now, the Stockton facility has already
20 received significant investment over the last
21 several years including air-conditioning and new
22 labs, but it will still receive investments in
23 areas that are warranted to give it a fresh
24 paint -- fresh look with fresh paint and other

1 investments to update it.

2 We'll, also, provide iPads to all 3rd

3 through 8th graders to help them integrate

4 technology with the curriculum. It is a very

5 significant investment that will only -- we're

6 only making so far in the welcoming schools

7 across the city.

8 We'll make sure, also, that there are

9 supports with the social emotional needs of the

10 students. We understand that changes like this

11 are challenging, that any time somebody goes

12 through a change that it can be upsetting. And,

13 so, learning from what's happened in Chicago in

14 the past and from other Districts, we're

15 providing supports at Stockton beginning right

16 now and at Courtenay as these students go

17 through changes with principal transition

18 coordinators to provide support for our

19 principals as they manage through all of this

20 change.

21 And we're going to make sure that the

22 students who have special needs, as you can see

23 down at the bottom, students with disabilities,

24 English Language Learners, Students in Temporary

1 Living Situations, that all of those students
2 have the kind of care that they need to help
3 them through this transition, and we know that
4 that's very important in this specific action
5 and we're paying careful attention to that.
6 There's information down at the bottom of the
7 third page on who to contact to make sure that
8 your child has the support and the connection to
9 the new school that he or she needs.
10 So, we've put a lot of care into this
11 process and we're here now to get your reaction
12 that -- or your ideas on what else you think we
13 need to do to make this go as smoothly as it
14 can. And, again, what you tell us will be
15 communicated back to the Board and the CEO very,
16 very quickly here, verbatim and summarized form.
17 So, with that, I'd like to pass it over
18 to my colleague, Sebastien, to describe you the
19 process for this evening and what we will do to
20 make sure that people have a chance to be heard
21 and that we can hear from as many of you as who
22 would like to speak. So, let me turn it over to
23 Sebastien.
24 MR. DE LONGEAUX: So, welcome and thank

1 you for being here tonight. My name is
2 Sebastien De Longeaux, I'm the Chief Procurement
3 Officer for CPS.
4 So, the objective of this meeting is to
5 hear from you. There is a court reporter to
6 capture every remark as well as a CPS
7 note taker to report everything to our
8 CEO Barbara Byrd-Bennett, and the Board Office.
9 Since we want to give everybody a
10 chance to speak, and probably won't be a
11 challenge tonight, each designated operator has
12 2 minutes maximum to share their thoughts. To
13 that purpose, we have a timekeeper who will be
14 holding up timecards to show how much time the
15 speaker has left.
16 If people have written speeches or
17 other testimony materials, they should have --
18 they should leave copies with the court reporter
19 to be part of the permanent record.
20 The registration table for speaker
21 signup will remain open, which the one that is
22 outside right here, until 8:30 tonight and you
23 must signup if you want to speak tonight.
24 The meeting will last until 9:30 and

1 not beyond due to the closing of the facilities.
2 So, there is another meeting on
3 April 11th at 7:30, same time, same location,
4 for those who couldn't speak tonight, and we,
5 also, as Tim Cawley mentioned, a public hearing
6 on the 16th from 8:00 to 10:00 p.m.
7 Now, I'm calling, since we don't need
8 any translation, can we confirm that everybody's
9 okay about translation?
10 So, now I'm calling the three first
11 speakers who are Catherine Humphreys,
12 Wendy Auffant, and Christine Clark. Can you,
13 please, state your name and your affiliations
14 with the school at the mic.
15 MS. HUMPHREYS: Then do I start?
16 MR. DE LONGEAUX: Yes.
17 MS. HUMPHREYS: Hi, my name's
18 Catherine Humphreys, I'm a parent of a
19 kindergartner at Courtenay Elementary.
20 And I, like many other parents, love
21 the city. We love its diversity and culture.
22 But to stay here, parents also know that they
23 must learn to love the schools around them. We
24 must love them enough to invest our all to

1 improve them and to maintain their high
2 performance.
3 Courtenay Language Arts is an example
4 of a high performing school. It has been
5 awarded the Academic Excellence Improvement
6 Awards and has received notice as a spotlight
7 school.
8 The secret to Courtenay is its
9 100 percent lottery system that encourages the
10 support and involvement of parents. The
11 proposal to change Courtenay into a neighborhood
12 school and relocate it to Stockton's facilities
13 does a disservice to Courtenay and Stockton
14 communities.
15 Students deserve to be welcomed into a
16 school whose current 100 percent lottery model
17 has proven to excel at educating students from
18 all backgrounds. There is no precedent for
19 relocating a high performing school while
20 completely changing its fundamental model.
21 There is, however, precedent for
22 allowing a high performing school to expand its
23 model. Disney II is currently in the planning
24 stages of expanding its lottery-based model into

1 a shared building.

2 Not only do students deserve to attend

3 a school that can deliver on its promise of

4 academic excellence, parents like me deserve to

5 know that our efforts to improve the schools

6 around us are not wasted but rewarded. Parents

7 like me need to know our voices are heard, our

8 voices are listened to, and make a difference.

9 Listen to my voice and let me know I

10 can make a difference. Courtenay Elementary

11 must stay a 100 percent lottery school.

12 MS. AUFFANT: My name is Wendy Auffant, and

13 I'm from Courtenay Elementary.

14 The current proposal before the Board

15 regarding the relocation of Courtenay School is

16 insulting and disrespectful to parents in its

17 design and how its been communicated. Courtenay

18 was not on the final list of school closures

19 and, therefore, Courtenay School stakeholders

20 were not provided with a community forum as

21 promised by CPS (Applause).

22 Over the winter, CPS launched a

23 three-month community engagement process with

24 over 20,000 community members over 30 public

1 meetings. Courtenay School was not provided a
2 single meeting and you denied me the opportunity
3 to advocate for my child, my child's school, and
4 my child's community.
5 I find this proposal completely
6 disingenuous in its merit. While CPS
7 communicates that Courtenay is merely
8 relocating, it does not address the fact that
9 the proposal is fundamentally changing the
10 design altogether by making Courtenay a
11 neighborhood school. Courtenay has never been a
12 neighborhood school, it has always been a school
13 of neighbors. The small school, 100 percent
14 lottery design that has made Courtenay
15 successful, drawn families from all over the
16 city, and provided choice for parents and
17 children will cease to exist.
18 CPS continues to lose enrollment of
19 city schools to the suburbs and private schools
20 because of terrible proposals like this one.
21 CPS has a responsibility to the families of this
22 city to put forth proposals of excellence, not
23 mediocrity. If CPS is going to create upheaval
24 in the lives of young people by closing and

1 relocating their schools, then they should do so
2 with thoughtfulness, integrity, and a goal of
3 improved outcomes for children.
4 In other neighborhoods, CPS has rallied
5 communities around exciting programs like wall
6 to wall IB, STEM focus, and fine arts magnet
7 among others. Yet, in the case of Courtenay, it
8 seems as though the only idea was to strip away
9 our successful model and turn us into a
10 neighborhood school.
11 Perhaps if Courtenay and Stockton
12 stakeholders had been brought to the table
13 months ago, together we could have crafted the
14 type of proposal that children deserve
15 (Applause), one that we can all be proud of and
16 one that we as parents demand (Applause).
17 MR. CAWLEY: Excuse me, the court reporter
18 has requested that while the speakers are
19 speaking that you don't applaud only because she
20 won't be able to capture the comments because
21 she can't hear them. So, if you could maybe
22 save it until the end, she'll be able to capture
23 every word that way. Thank you.
24 MS. CLARK: Hi, my name is Christine Clark,

1 I'm a parent of a Courtenay student, I have a
2 Courtenay kindergartner.
3 A year before my daughter was to start
4 kindergarten, I started looking at schools. I
5 was allowed to apply to 20 under the CPS options
6 for enrollment plan. I did apply to 20. I was
7 wait listed at all 20. Courtenay was on my list
8 because in the 2010 October issue of Chicago
9 Magazine, it was ranked the 25th school out of
10 488. I thought it was amazing, especially,
11 considering Courtenay's low income percentage,
12 they had 77 percent low income. So, of the top
13 34 schools, it was the highest percent low
14 income and still turning out results like that
15 and I thought this is kind of an amazing place.
16 I wasn't offered any spots at any
17 school. In late July, finally, Courtenay called
18 me off the waiting list and we went to tour the
19 school and we met with the assistant principal
20 because there was currently no principal at
21 Courtenay. She explained that there wouldn't be
22 a principal for the entire kindergarten year.
23 I went with -- I -- I trusted her, I
24 thought the school has a great reputation, it

1 seemed like a nice place with a great small
2 community feel, so I thought, well, maybe we can
3 skip having a principal kindergarten year and
4 we're just going to go with it.
5 It has turned into an amazing place.
6 My daughter's happy there. We're happy there.
7 We've found an amazing community of parents that
8 work together, and volunteer, and help out, in
9 addition to the fact that my daughter is
10 excelling, and happy, and learning.
11 I guess I was most insulted when I
12 received my packet on March 21st, first of all,
13 that I got a packet at all not knowing that we
14 were on a list of effected schools. I know
15 we're not, technically, closing, but we're
16 effected and being fundamentally changed in
17 every way.
18 I was most offended when it said that
19 our administration would be taking over. We
20 currently have a very small school with no
21 principal, an assistant principal, and one man
22 in the office. So, our assistant principal and
23 our one man in the office are going to takeover
24 this new school, over 750 students. It's

1 insulting.

2 I'm here tonight because it's the first

3 chance I've had. I didn't know that there was a

4 four-month process going on. My daughter was

5 happy at a good school that, as far as I knew,

6 was 25th out of 488, why would they mess with

7 it? I'm here tonight because it's the first

8 chance and you've heard me (Applause).

9 MR. DE LONGEAUX: I'm now calling

10 Joshua Keesecker, Theresa Fernandez, and

11 Debby Pope.

12 MR. KEESECKER: Bon soir, my name is

13 Joshua Keesecker, I'm a parent of a Courtenay

14 student.

15 Courtenay is a 2012 Honor Roll

16 School, one of 18 Spotlight Schools, one of

17 29 Academic Excellence Award recipients, one of

18 31 Improvement Award recipients. Courtenay

19 Elementary School is in the top 20 percent of

20 performance for Chicago Elementary Schools. In

21 2010, Chicago Magazine ranked Courtenay as the

22 No. 25 elementary school in the city, as you

23 heard, top 10 percent.

24 Courtenay has a 100 percent

1 lottery-based enrollment system. Courtenay's
2 successful model should not be expanded --
3 should be expanded, I apologize, not abandoned.
4 The North zone of Chicago is underserved by a
5 magnet and lottery schools. And maintaining a
6 100 percent lottery school in this area is
7 essential.
8 We are excited at the possibility of
9 expanding the Courtenay School model to reach a
10 wider population, but we will not allow it to be
11 expanded irresponsibly nor by fundamentally
12 changing the Courtenay School enrollment and
13 school model. A 100 percent model lottery
14 school is the only responsible decision on the
15 part of CPS.
16 There's only Stone north of Montrose
17 Avenue to serve some of the most densely
18 populated and underserved neighborhoods in
19 Chicago: Uptown, Edgewater, Rogers Park, and
20 Lincoln Square.
21 We have circulated a petition among our
22 families with over 50 percent of student
23 families signing on to 100 percent magnet
24 lottery system including LSC members. I'd like

1 to read you a portion of it and you won't have
2 to translate this part. (Spanish language.)
3 Thank you.
4 MS. FERNANDEZ: I'm not as prepared as some
5 of the other parents here. Okay. My name is
6 Theresa Fernandez, I have two children at
7 Courtenay Elementary, a 4th grader and a 6th
8 grader.
9 And I think that the merge is a great
10 idea. And my kids are the high-performing
11 students, they are the ones who exceed standards
12 and who get a perfect score on the ISAT. And
13 I'm telling you they -- you know, they're --
14 Courtenay can survive this. We've been there
15 for only three years, but Courtenay can survive
16 this merge and it makes sense. And if there's
17 any Stockton parents behind me, welcome to
18 Courtenay.
19 MS. POPE: Good evening, I'm Debby Pope, I'm
20 a retired teacher, a neighborhood resident in
21 Edgewater, and an employee of the Chicago
22 Teachers Union.
23 I am here to speak on behalf of the
24 Stockton School that serves the Uptown

1 Community, that serves poor children, that
2 serves rich children, that serves middle class
3 children, that serves black, brown, and white
4 children, that serves any child that comes to
5 the door (Applause) that does not require a
6 lottery application, that requires an open door
7 with caring and compassionate educators who are
8 there to meet the needs of each and every child.
9 Every community deserves and needs a
10 Stockton School. You note that the facilities
11 are much better at Stockton School, that they
12 have computer labs, air-conditioning, and
13 various things like that, well, it's about time
14 that more of our neighborhood schools (Applause)
15 have those facilities because too many of our
16 neighborhood schools have been resource-starved
17 for too long.
18 What's gone on in Uptown is a huge
19 amount of gentrification, that is what has
20 resulted in the diminishment of the population
21 at Stockton School, the fact that a whole lot of
22 people have moved into the area who don't have
23 school age children or who are paying for
24 various tuitions or sending their children to

1 magnet schools because somehow their children
2 manage to be the kids who get into the magnet
3 schools.
4 So, not too surprisingly, Stockton's
5 population has gone down somewhat, but Stockton
6 is a school with an open door and an open arm.
7 And we want open-minded children at open-minded
8 schools, and we want schools to meet the needs
9 of our community.
10 We are tired of this nonsense. This is
11 turning Stockton School around, this is not
12 closing Stockton School. Basically, what you're
13 doing is you're saying to the staff at Stockton,
14 you're worthless, we're turning you around,
15 we're bringing in the staff from this magnet
16 school and they're going to takeover because
17 they know what's better for your kids and CPS
18 knows what's better for your kids (applause) and
19 that's a bunch of crap.
20 MR. DE LONGEAUX: I am now calling
21 Keti Tuthorn, Vivian Assumpaco, and
22 Diane Horwitz. Can you, please, state your name
23 and affiliation to the school, please.
24 MS. TUTHORN: My name is Keti Tuthorn, and

1 I'm a parent of a child at Courtenay.

2 And listening to some of the people

3 that came by here, it seems like we do have two

4 very different cultures between the Stockton and

5 the Courtenay community and we both love and

6 tend to defend our schools.

7 I just wanted to say that as Wendy had

8 mentioned earlier, I think one of the most

9 insulting things is keep hearing about this has

10 been going on for four months, we've heard

11 20,000 community commentaries, and, yet, I was

12 informed on the 21st that this was happening to

13 my school.

14 Not only that, but the list that came

15 out on February 13th, Courtenay was not on that

16 list. So, it came completely out of the blue.

17 And, then, when we did receive it a month later,

18 the first community meeting was after this

19 March 31st deadline.

20 This deadline is deceitful in nature.

21 An extension was granted to CPS from December

22 1st to March 31st to publish this and it was

23 based on the premises that the community would

24 have some sort of feedback and that feedback was

1 needed to be obtained in order to do this list.
2 Well, that's not the case for Courtenay. I
3 don't understand, this shouldn't validate any
4 proposals set forth since we did not have a
5 voice.
6 Courtenay is neither an underperforming
7 school nor an underutilized school. To the
8 contrary, we are full with a 200-plus waiting
9 list. We're recognized as a rising star, we're
10 a school of distinction. Again, how did we end
11 up on this list?
12 Semantics and rhetoric, we're saying
13 that Courtenay is not being closed out, we are
14 simply being moved. Well, if we're being moved,
15 then that means all of it has to move, that
16 means our model has to move. You do not just
17 send children, faculty, and staff, and hang up a
18 shingle that says, "Welcome to Courtenay," and
19 that makes Courtenay the school that it is. It
20 doesn't work that way.
21 The statistics used to calculate
22 utilization is inherently flawed, especially
23 when accounting for special ed population, both
24 which Stockton and Courtenay have a 30-plus

1 percent special ed population.

2 Now, Courtenay is 41.7 percent low

3 income, 33.3 special ed, 32.3 limited English --

4 MR. DE LONGEAUX: Can you, please, conclude.

5 MS. TUTHORN: Yes.

6 At 2012, our 8th graders scored 100

7 percent in both reading and math. We are a

8 school of excellence. I would hope that we

9 would expand the Courtenay model and allow all

10 children of Chicago to be able to participate

11 and not be confined to any neighborhood.

12 MR. DE LONGEAUX: Thank you.

13 MS. ASSUMPACO: Good evening. My name is

14 Vivian. I have a 5th grader and a kindergartner

15 at Courtenay School.

16 I arrived in the country in last year

17 in February and I missed application time, so I

18 spent about five months looking, contacting

19 schools, searching, talking with principals, and

20 but no one could help me because I had lost the

21 application time. I know we always have a spot

22 in our neighborhood school, but my neighborhood

23 school was Brennemann and it was not an option

24 for me. So, finally, I got a spot on Courtenay

1 because I have a 5th grader and my
2 kindergartner, she was on the waiting list.
3 So, me and so many other parents here
4 tonight, we have kids that are great students.
5 My son is one of the best students of his class,
6 above the CPS -- CP -- CPS average for his
7 grade. For sure we want the best -- the best
8 school for our kids, the best environment, the
9 best security for our children, an excellent
10 school that helps our kids to learn more and
11 more, to challenge them every day, that help
12 them to grow in their abilities and knowledge.
13 For me, for us, that was what Courtenay is as a
14 100 percent lottery school.
15 CPS says providing a better -- a better
16 education for all these children, but how
17 merging these grades and high performance with
18 100 lottery school with the neighborhood would
19 be the better school for our kids?
20 I was so happy at Courtenay that I just
21 applied for -- for one more magnet school last
22 October that is beside my home, but I'm on the
23 waiting list. CPS now let us to reapply to new
24 school, but all good schools are full, have no

1 spot, and long waiting lists. So, what do I
2 supposed to do now?
3 At least we need to have some priority
4 in these schools we are reapplying for. In my
5 opinion, it's not fair that we go to the bottom
6 of the waiting list if we just apply now at the
7 same time as the other families.
8 To conclude, so what I want? I want a
9 grade school for my kids, I want to keep our
10 high performance school as 100 lottery for
11 Courtenay, I want to -- or I want a priority in
12 those school I need to reapply, and I hope CPS
13 give us -- give us the chance to choose a good
14 school and -- now and not only be a matter of
15 look and the waiting list situation.
16 Thank you.
17 MR. DE LONGEAUX: Thank you.
18 MS. HORWITZ: Hi, my name is
19 Dr. Diane Horwitz, I have a Ph.D. in education
20 with a specialty in curriculum and instruction.
21 And I'm part of a network of over 100
22 education professors and researchers in the
23 Chicago area who have recently written a
24 research brief, which I'll give you a copy of,

1 which argues that all school closings need to
2 have a moratorium, the research evidence does
3 not backup the plan. I'm here, specifically, to
4 talk about class size tonight.
5 An analysis in Chicago Catalyst last
6 week documented the increased over-utilization
7 in all consolidated schools and the studies
8 pointed out that class sizes will likely be
9 increased.
10 When you look at both Stockton and
11 Courtenay, the story of these schools have
12 similar elements, both value small class sizes,
13 both have large, over 30 percent special
14 education students, many of whom who are served
15 in small self-contained classrooms with a merger
16 of these schools, small class size is going to
17 be jeopardized.
18 One Stockton teacher, I read this, she
19 said, "To punish our school for doing right by
20 our students for choosing to fund smaller class
21 size is not only unwise but unconscionable."
22 If you look at any of the education
23 research, small class sizes particularly for low
24 income and minority students is one of the most

1 effective education strategies.

2 Stockton is not underutilized. I've

3 seen the room-by-room breakdown. Some of the

4 things that you tout for Courtenay parents:

5 Science labs, computer labs, a drama room, a

6 music room, a library, a special room for

7 autistic children, nine special education rooms.

8 There are three rooms that are not being used,

9 four for other purposes, that's seven potential

10 rooms for 275 students, three of those rooms are

11 for the special education students now at

12 Courtenay. These numbers do not add up.

13 This -- this schools -- or these

14 schools tell a sorry story about CPS's plans for

15 vulnerable students.

16 MR. DE LONGEAUX: I am now calling

17 Claudia Pesenti, Brooke Gard, and

18 Christine Clancy.

19 MR. CAWLEY: If you would like what you've

20 written to be entered into our record, please

21 hand it to the court reporter, it will actually

22 be documented there and would -- it would help

23 her just confirm that she got it right. So,

24 feel free to get that to her. It's your

1 decision, of course.

2 MS. PESENTI: Good evening, I'm

3 Claudia Pesenti, I'm the CP delegate at Stockton

4 School.

5 Unlike Mr. Cawley, I live in Chicago

6 and I've taught in Chicago Public School System

7 for 27 years. My students are not scores. I

8 understand when people say, "Courtenay can

9 survive this." My students have survived Sudan,

10 Somalia, and now the Chicago Board of Ed.

11 I'm a teacher, I was a teacher in the

12 library which was closed at Stockton. So, when

13 you see that we have science, computer labs,

14 library, and playground, I disagree. We have

15 computer labs, but they are not financed with

16 the best technology, although, I do hear we're

17 going to be getting iPads because we've decided

18 to spend our discretionary funds on smaller

19 class size.

20 We have a number of students that are

21 ELL students, we have a number of special needs

22 students, and we, also, have a large and growing

23 population of homeless students, some who travel

24 from Englewood to attend our school because

1 there's family there, there's Stockton School
2 family. I'm teaching children of my students.
3 Enrollment has declined into a diminishing low
4 and mixed income housing in the Uptown area.
5 Our building has not had a Board Member
6 walk through, to my knowledge, nor has anyone
7 walked from the CPC where we had family members
8 shot in front of the CPC during broad daylight
9 last year, and two years ago we had a
10 13-year-old shot on Halloween Eve. I'd like to
11 know how they're going to up the security and
12 the transition for our students to our school
13 let alone the students that come from Courtenay.
14 Our students are not going to be sold
15 out for an iPad, for air-conditioning, or
16 anything else that they deserve (Applause). We
17 demand, we demand that our schools stay open.
18 We welcome our students so we don't need another
19 welcoming school. We invite Courtenay parents
20 to join us as it seems to be happening that they
21 realize that this is an ineffective, not well
22 thought out program, and this transition
23 planning team needs to plan more before they
24 transition.

1 MR. DE LONGEAUX: Your time is up.

2 MS. PESENTI: Thank you.

3 MS. CLANCY: Hello, my name the

4 Christine Clancy and I, too, have a

5 kindergartner at Courtenay, but I am reading

6 this letter on behalf of a parent who had a

7 death in the family today.

8 I'm here today because I laid down

9 roots at a wonderful little school this year.

10 It has a community feeling that I never thought

11 I would find in CPS. I feel like my daughter is

12 safe and truly cared about when I drop her off

13 each morning. Courtenay Elementary has a model

14 that keeps class sizes small and learning big.

15 I heard rumors that Courtenay might

16 relocate in the future, but I never thought this

17 high performing school would be fundamentally

18 changed. When I got the letter that Courtenay

19 will be merging with Stockton and made an Uptown

20 neighborhood school, I was heartsick.

21 This area in the city which is already

22 lacking the number of magnet schools found in

23 Lincoln Park and Lake View needs to keep this

24 gem of a school. Simply renaming Stockton

1 Courtenay and handing us their model has parents
2 up in arms. We did not meet any of the criteria
3 to be closed and, thus, we were not given an
4 opportunity to advocate for our children until
5 now.
6 I came here today to insist you truly
7 relocate our gem of a school and retain its 100
8 percent lottery model. We pride ourselves on
9 being a school of neighborhoods where many
10 people who weren't happy with their neighborhood
11 option have come together to create a unique
12 learning environment.
13 Our model is successful and we have not
14 been told that Stockton is a small district and
15 surrounding schools are not overcrowded which
16 would allow the Stockton boundaries to be
17 withdrawn into them. Neighborhood schools can
18 be wonderful, but that is not the model we
19 choose and not the model that has led Courtenay
20 to impressive records.
21 We have a mother who spends $130 a week
22 in gas to get her two boys to Courtenay because
23 her son has to pass through metal detectors to
24 start kindergarten. We wanted something

1 different.

2 We have several families who found and

3 put down roots at Courtenay after trying other

4 schools they were not satisfied with. Our

5 kindergarten class is filled with families

6 who've applied to many schools and received wait

7 listed numbers into the 900's.

8 We found our place with the CPS and we

9 do not want this successful model taken from us.

10 Thank you.

11 MR. DE LONGEAUX: I'm now calling

12 Steven Serikaku, Tricia Black, and Karen Zaccor.

13 Did I call you already?

14 MR. CAWLEY: Oh, yeah, she's the last one,

15 she's Brooke Gard.

16 MR. DE LONGEAUX: I'm sorry.

17 MS. GARD: That's okay. My name is

18 Brooke Gard, I'm a parent at Courtenay.

19 I will go in line with the people

20 before me saying that I spent a couple years

21 researching the schools in Chicago, spent

22 several months applying, spent several months

23 waiting to hear, and then spent an additional

24 three or four months waiting for one of my wait

1 listed schools to give me a call. I was, also,
2 wait listed on all of the schools I applied to,
3 and when we finally got the call from Courtenay,
4 we, too, were thrilled and we've been very happy
5 there.
6 I will say that this plan to me is
7 illogical and confusing mainly because we were
8 not given an opportunity to speak about it, or
9 process it, or come up with any other ideas, we
10 were simply handed the proposal and, pretty
11 much, told that it was what was going to happen.
12 Everyone is telling us that Courtenay's
13 being relocated. The problem is our
14 administration is not being relocated and our
15 model is not being relocated. So, I ask you,
16 which part of Courtenay is, in fact, being
17 relocated to the building of Stockton?
18 We have, also, been told about all
19 these fabulous things, these science labs,
20 whatever else, auditorium, gym, all these fancy
21 things, and to be honest with you, if any of you
22 have seen the Courtenay building, clearly none
23 of us chose Courtenay for the amenities that the
24 building offered (Applause). So, that's not

1 going to sell us.

2 We need our model, we need a clear

3 picture of what's going to happen. We would be

4 thrilled to expand the model so that more

5 children can benefit from it, but this is not

6 the way to do it. And it doesn't seem possible

7 to take a school of 250 children and multiply it

8 by however many number of kids and expect that a

9 new principal is going to takeover and

10 successfully transfer everything.

11 MR. SERIKAKU: Hi, I'm Steven Serikaku, and

12 I'm retired from CPS, but I'm a Stockton

13 graduate.

14 And (Applause), you know, I have -- I

15 have fond memories of Stockton and, you know, I

16 think this school does well for the population

17 it has. But I have to say that I'm really

18 disappointed in CPS.

19 Whoever, you know, thought this -- this

20 up did not do a very good job. To say that

21 you're going to combine these two schools with

22 totally different cultures, have the Courtenay

23 administration takeover the school when, from

24 what I've heard, there is no Courtenay

1 administration except for an assistant
2 principal, and Stockton, a bigger school, has a
3 CPC, it has special education classes, it has
4 ELL students. Why would you think that
5 Courtenay's administration would do a better job
6 than Stockton's?
7 And if this is an example of the kind
8 of thinking that goes into school closures and
9 consolidations, why are you doing this? You
10 know, you clearly have to go back and rethink
11 this. This is not a good idea. And you are
12 hurting people. Real people.
13 And, you know, from what I've seen,
14 more and more, both the city and -- and CPS, are
15 treating kids, teachers, and people in the
16 community like interchangeable parts, and that
17 is not the case.
18 So, again, I ask you to rethink this.
19 MS. ZACCOR: My name is Karen Zaccor, I live
20 one block away from Stockton School, my daughter
21 graduated from Stockton School, yay (Applause),
22 and for my first few years of teaching, I taught
23 at Stockton School.
24 I'm here to say, and I think

1 everybody's here to say, don't close Stockton,
2 don't close Courtenay, don't close any school
3 (Applause).
4 And, really, I just want to kind of
5 call out the lies that we keep hearing from the
6 Board of Education. So, on your literature here
7 on the first page it says, "We have looked at
8 every individual school and our decision
9 incorporates the feedback we received from more
10 than 20,000 of you."
11 Well, no, it didn't, because 20,000 of
12 us said, "Don't close our schools."
13 On Page 3, it euphemistically talks
14 about welcoming schools. Well, several Stockton
15 parents have told me that they have been told
16 they have to reapply for their children to go to
17 Stockton School and they're right now not
18 feeling welcome at all to their own school where
19 their children have been going. They're
20 wondering what's wrong with them that perhaps
21 they're not going to be welcome back there.
22 Third, on the same page, I just want to
23 express concern that it's taking closing schools
24 for you to all of a sudden be concerned about

1 providing customized safety plans at every
2 school when, as we all know, we have numerous
3 Chicago School children being shot every year.
4 So, to me, all of these things add up
5 to the Board of Education does not now and has
6 not for my entire 35 years in Chicago cared
7 about the children who go to Chicago Public
8 Schools.
9 MR. DE LONGEAUX: I'm now calling
10 Tricia Black, Marc Kaplan, and Tim Furman.
11 Tricia Black.
12 Marc Kaplan. Marc Kaplan.
13 MR. KAPLAN: So that means I can speak for
14 four minutes, right?
15 My name's Marc Kaplan, I'm with the
16 Local School Council of Uplift Community High
17 School, my son went to Stockton and now he's a
18 biology teacher at Von Steuben High School.
19 I'm here, if you look at this room,
20 it's way, way less people coming here to testify
21 than at the hearings at Truman College or around
22 the city. There were 20,000 people, as you
23 said, that came to the hearings around the city.
24 They were parents, they were students, they were

1 teachers, they were community members, they were
2 business people. And I was at both Truman
3 College hearings, I didn't hear one person at
4 those hearings say we support closing any
5 schools (Applause).
6 I, also, realize that not -- none of
7 these Courtenay parents were there or hardly
8 there, because they didn't think that their
9 school was effected (Applause).
10 This is a complete flip-flop sham that
11 is going on here. Let's be real clear about
12 this. I think that Courtenay parents, Stockton
13 parents, Stewart parents, Brennemann parents,
14 Trumbull parents, McPherson parents, McCutcheon
15 parents, parents from Uplift, all have to work
16 together with community members, with business
17 people, and with teachers (Applause) to make
18 sure that none of these schools close
19 (Applause).
20 And I think there's probably not going
21 to be that many more speakers, so what I propose
22 is that when this is over, that all of us spend
23 a little bit of time talking together to figure
24 out what the next steps we have to do to work

1 together to make sure that not one school is
2 closed, not the lives of not one public school
3 child or one parent is disrupted, and that we
4 can really have the kind of quality education
5 and schools that our children need.
6 Thank you.
7 MR. FURMAN: My name is Tim Furman and I live
8 in Rogers Park, and my affiliation to the
9 schools is that I'm a resident, I'm a taxpayer,
10 I'm a voter, and I'm an American, with no
11 disrespect personally.
12 I usually turn and I face the elected
13 people in the audience, but I don't know who's
14 on the LSC out there, so all I've got is you,
15 sir, a Board Member. And if this were a
16 suburb or -- thank you, I only knew about this
17 Board Member here. And God bless you for public
18 service, it, certainly, can't be easy. But in
19 any other community, in any other city in this
20 State, we would vote for you and you would be
21 accountable to us. And you're the only guy in
22 the room that has a voice in any of this. This
23 is the staff and we all know that they really
24 don't have a voice in any of this.

1 I know that this isn't a form for you
2 to answer questions, which is bizarre to me, but
3 that's what it is, so I have two ideas for you:
4 One is, would you take this message back to the
5 CT -- the -- Barbara Byrd-Bennett, because she
6 was in the press a few weeks ago with something
7 like a quote about how everybody got it at these
8 hearings. And not everybody got it. And I
9 think if you know -- you surely know there's an
10 express called, "the fog of war," and I think
11 she's living in the fog of war, because I think
12 she's waging war on these communities
13 (Applause).
14 So, will you, please, take back a very
15 crystal clear message that she was wrong to say
16 that, and maybe she just got it wrong, but you
17 can only be so tone deaf before people start
18 thinking you're crazy or arrogant.
19 MR. DE LONGEAUX: Please complete.
20 MR. FURMAN: We are meeting after here after
21 this is over, we're planning something on the
22 27th, okay? Come join us. We'll be in the
23 streets in Uptown. We're going the save all of
24 these schools, all of these communities.

1 MR. DE LONGEAUX: Your time is up.

2 I'm now calling Miriam Socoloff,

3 Michael Presser, and Lois Jones.

4 MS. SOCOLOFF: My name is Miriam Socoloff,

5 I'm a -- I know something about teaching and

6 learning in this city.

7 I have been a CPS teacher for 34 years,

8 and I continue to be an art educator, I'm a

9 Golden Apple Winner, and a Presidential

10 Recognition Winner, that's President Barack

11 Obama (Applause), so -- and I sent my child to

12 Chicago Public Schools and he thrived and got

13 into one of the most selective colleges in the

14 country going to his regular old low scorings

15 neighborhood high school, okay (Applause)? And

16 he said who's he going to be friends with, and I

17 said he's going to be friends with the wonderful

18 children at that school. Maybe they don't

19 always test well, but they're as smart as can

20 be.

21 So, CPS has now heard from 20,000

22 distraught parents, teachers, and most

23 importantly, children crying for their

24 schools to be kept open. You have heard from

1 Governor Quinn, Aldermen Toni Preckwinkle,
2 church leaders, you have seen the research that
3 this isn't going to save any money. What you
4 are doing is wrong.
5 The double speed is appalling welcoming
6 schools, et cetera, world class cities like
7 these spectacles make us to look as. They drive
8 people to the suburbs is what they do. It
9 completely undermines confidence in our schools,
10 it disrupts our community, and disrupts the
11 lives of children. It's -- it's child abuse.
12 The payoff of an iPad, come on. So,
13 they're going to carry the iPad in the backpack
14 through the unsafe neighborhood to the home that
15 they don't have WiFi. Oh, I guess they can go
16 to the public library, but the Mayor already cut
17 the hours of the public library (Applause).
18 And what, you know -- I mean, people --
19 you heard people speak. You haven't heard
20 anybody for this, but you have your talking
21 points, you're unswayed by public opinion
22 because you have an agenda, and the agenda is
23 the privatization and corporate reform of these
24 schools and these meetings are the equivalent of

1 a show trial. Now --

2 MR. DE LONGEAUX: Your time is up.

3 MS. SOCOLOFF: -- I believe everybody's a

4 human being, so I'm going to say to you, rise to

5 the occasion, don't fall along, and don't be a

6 decent and vote.

7 MR. PRESSER: My name is Michael Presser, I

8 have two children who are at public schools in

9 Chicago.

10 Sad thing for me is sort of what Miriam

11 was just saying is that it's already done. I

12 mean, as far as the people here who came to hear

13 to listen to all of us, they already know what

14 the answer is in their minds. They are going to

15 listen to a lot of impassioned people, they're

16 going to cluck their tongues and say, oh, yeah,

17 they were all impassioned, but they don't

18 understand how much better this is for

19 everybody. We will put up with listening to

20 them, and we will be kind, we will be responsive

21 on the surface, but uno will still get a share

22 of the schools that it deserves in the charters.

23 And the craziness of so many people,

24 Rahm Emanuel included, who find the schools that

1 are underutilized. What are some of the
2 underutilized classes, it would be the Lab
3 Schools (Applause), that's half the size of the
4 classrooms. It's going to be all of that.
5 I worked in a therapeutic day school at
6 Rush -- at Rush University Medical Center, five
7 kids in a classroom, special needs. They
8 weren't underutilized, they were finally getting
9 something that meant something to them. It
10 actually worked.
11 We always are giving too little, too
12 late, and then we will all sit here and say, I
13 know they're impassioned these parents, but as
14 they war with each other, the Stockton parents
15 with the Courtenay parents and all that, and
16 they get angry at each other, fine, we will
17 still get what we want and what we want is for
18 the decisions to be made by anybody but the
19 people closest.
20 The decisions will never be made by the
21 parents, the decisions will never be made by the
22 teachers, and the decisions will never be made
23 by the students --
24 MR. DE LONGEAUX: Your time is up.

1 MR. PRESSER: -- the whole process indicates
2 that. Thanks.
3 MS. JONES: Good evening, my name is
4 Lois Jones, I am from Chicago Teachers Union,
5 I'm a field rep for Stewart -- not Stewart,
6 Stockton (Applause).
7 I'm very familiar -- well, I thought I
8 knew Courtenay, I'm sorry, because I knew them
9 during the strike. And I, also, talked to the
10 Network Chief on the day that these school
11 closings came out the next day, and I was
12 assured that not one student was going to be
13 affected negatively by any of these actions.
14 That's what the Network Chief told me.
15 Well, I learned definitely today
16 talking to the parents from Courtenay and I,
17 also -- well, I knew differently, anyway, from
18 Stockton parents because I had talked to
19 Stockton teachers.
20 So, anyway, that aside, I am
21 representing Courtenay here, also, from Chicago
22 Teachers Union. I have no referrals from
23 Stockton, no referrals from Courtenay, because
24 they know what good class sizes are. They are

1 less, not 28 maximum, and you have to wait until
2 you get to 56 to have another classroom, they
3 are 28, less than 28, there's 20.
4 Now, we've got two 1st graders -- two
5 1st grade classes at -- I'll talk to you, I
6 guess you have the power here, two 1st grade
7 classes at Stockton about 22, 23. We've got
8 another class over at Courtenay of 22, 23.
9 Both -- both schools are doing fine, I don't
10 care what your numbers say, I don't care what
11 the test scores say, both students -- all those
12 students are learning, all those students are
13 achieving, and they're all doing great.
14 Now, there are not eight extra classes
15 at Stockton to accommodate Courtenay. There's
16 not there. There's three that are not being
17 used -- well, one is for recess, right, indoor
18 recess, the library was closed because, I don't
19 know --
20 MR. DE LONGEAUX: Can you, please, conclude.
21 MS. JONES: So, anyway, there's not room at
22 Stockton for Courtenay and Stockton together.
23 You're closing Courtenay, you're closing
24 Stockton, you're opening up another completely

1 different school, and you are effecting every
2 single student in that population.
3 MR. DE LONGEAUX: Thank you.
4 MS. JONES: Don't do it.
5 MR. DE LONGEAUX: Now calling Diane Lyman,
6 Jesus Gonzalez, and Brenda Shiller.
7 MS. LYMAN: Good evening, my name is
8 Diane Lyman, I'm a parent of a kindergartner at
9 Courtenay. I don't have anything prepared, but
10 I just wanted to share my thoughts.
11 We, too, applied to 20 schools and were
12 wait listed. Our neighborhood school's not bad,
13 it's becoming overcrowded because of it's
14 reputation, so all is not last. We went to
15 school there for the first month.
16 Somewhere near after the strike, we got
17 a call from Courtenay. We were really excited.
18 We went to tour the school. We weren't thrilled
19 by the building, I mean, it's a small building
20 and it needs a lot of work, but you can divide,
21 the energy is tangible, and we were completely
22 sold.
23 Sydney started through many tears
24 because she was nervous, but she started. And

1 on Day 2, she looked at us as a 5-year-old and
2 said, "This is much better." Those words to my
3 ears were just, I can't even tell you as a
4 parent.
5 Anyhow, in the bottom of the 9th inning
6 to hear when we weren't expecting for all the
7 things and all the reasons that we went to
8 Courtenay in the first place are being taken
9 from us it was beyond disappointing.
10 I'm angry, upset, and now we're at
11 Ground Zero once more, trying to figure out what
12 our next step will be. Thank you.
13 MR. GONZALEZ: My name is Jesus Gonzalez, we
14 have a 4-year-old boy who's going to Stockton
15 CPC (Applause).
16 And I can tell you -- I wasn't prepared
17 either, I can tell you that Stockton is a great
18 school. This is the first year my son is there,
19 he's actually started to read, doing math,
20 draw -- drawings that's amazing for a 4-year-old
21 boy. And what they tell me, Stockton is not
22 doing a good job, I cannot believe it. I have a
23 stepson who is doing great, also, at Stockton.
24 And, also, I wanted to -- I was

1 thinking this as I read the paper, do you
2 thought about the future of the neighborhood?
3 They said it was in the past 10 years it dropped
4 17 percent. I been in the neighborhood for the
5 past 20 years, and it keeps changing. What will
6 happen in the next five years, what if we have
7 more kids, is it going to be overpopulated
8 school Stockton? Is that being thought about
9 that, is anyone have thought? I don't think so.
10 I will -- I'm supporting Courtenay, they want to
11 keep their school (Applause), Stockton we want
12 to keep they're -- we're school, so we have to
13 unite all the parents in order for us to be
14 heard, we will must -- we will do. And we are
15 going for Courtenay and Stockton, not together,
16 they keep going their own way and we are -- the
17 future's our kids so we wanted the best future,
18 they're competing them globally today, not
19 between Stockton or Courtenay.
20 So, want kid -- my kid to have a great
21 school and I think that he has it right now, I
22 don't want any changes. Thank you.
23 MS. SHILLER: Hello, my name is
24 Brenda Shiller, I am a teacher in Chicago Public

1 Schools, I'm also a product of Chicago Public
2 Schools, and my children went to Chicago Public
3 Schools.
4 My oldest daughter when she graduated
5 elementary school went onto Lincoln Park IB, my
6 youngest daughter who is 14 -- I'm sorry, my
7 oldest went to Von Steuben IB, my youngest is
8 now at Lincoln Park IB. And she didn't go to
9 Courtenay, neither one of them, they went to
10 Stockton (Applause). So, they got their great
11 education at Stockton.
12 And I am all for the Courtenay model of
13 100 percent lottery if that works for them, but
14 that's not what works for us. And we don't
15 think that Courtenay School is a bad school, we
16 don't think it's better than Stockton or worse
17 than Stockton, but Courtenay works for
18 Courtenay's parents and Courtenay's students and
19 Stockton works for us in Uptown.
20 We like our school the way it is, our
21 kids like our schools the way it is, our parents
22 like our schools the way it is, both schools.
23 Please, don't ruin either of them.
24 MR. DE LONGEAUX: I'm calling Risa Hynes and

1 Derek Bridges -- Risa, sorry, Hynes.

2 MS. HYNES: I'm Risa Hynes and my child goes

3 to Courtenay.

4 I am, actually, for the last 12 years

5 Courtenay participant. I have a senior that now

6 is at a Military Academy, I have a sophomore who

7 came from Courtenay and is now at a charter

8 school. So, we've been to every school. It was

9 my choice to signup for a lottery school, not my

10 neighborhood. For a small school for my child

11 to go to. Now we've got a fourth one coming in

12 and I don't know where he's going to go.

13 At the same aspect, I was born and

14 raised in Uptown. That was my choice. I can

15 tell you everything about the neighborhood, I

16 sat in Stockton and I volunteered when I was

17 younger, at CLC also, and they're not either one

18 of them bad schools.

19 The neighborhoods are completely

20 different that be it because where the Mayor

21 lives or where the Mayor doesn't live

22 (Applause). But you're telling me now after no

23 one knew about it, Courtenay's on the chopping

24 block and you guys used this big deal at

1 Courtenay telling me that we're going to get a
2 different facility, and we're going to move over
3 here, and Stockton's going to be dis-banished,
4 or whatever the case is, then you turn around
5 and tell Stockton that we're just moving in,
6 whatever it is to see all the children in
7 Stockton. Nobody knew this.
8 And as a parent, who is a product of
9 CPS, I don't have a great -- tell you that I --
10 no, I got kicked out of Senn High School, I'm
11 sorry, but it's not only the fact that you have
12 great teachers, you have great students, you
13 have great staff, I'm taking about the people in
14 the office to the maintenance crew, you got
15 great parents, the ones that are out here
16 actually giving a care. The rest of them, I
17 mean, that's the whole things.
18 So, if I want to stay at one school
19 because it was a lottery and Stockton's a
20 neighborhood school, then why would you force
21 the two together? That would be my main
22 concern. Thank you.
23 MR. BRIDGES: My name's Derek Bridges, I'm a
24 teacher at Stockton School.

1 I wasn't planning on speaking today,
2 I've been reprimanded for it in the past, so I
3 kind of know my place. But I was up here and I
4 was listening to all the Courtenay parents and
5 hearing what they had to say.
6 And, first of all, I feel like someone,
7 not us, owes you an apology. I thought you got
8 dragged into this because there was some obscure
9 promise to send students to a higher performing
10 school and they wanted to close Stockton is what
11 it came down to. So, they said, well, who can
12 we get that is higher performing? Well you've
13 heard here today all these parents that have
14 been on wait lists, involved in their school,
15 working hard to get into their school. I love
16 Stockton and I wish we had that sort of support
17 from every one of our parents.
18 We have students that walk-in that --
19 my -- I have students in my 5th grade class,
20 they're responsible for making sure that their
21 kindergartner, 1st grade, 3rd grade siblings are
22 all up, ready for school every day, because
23 guess what, their mom, single mom, maybe at
24 work, may have been working until 2:00 o'clock

1 in the morning before, or, honestly, maybe
2 passed out somewhere that they don't know where
3 she is, but that creates a very different
4 environment.
5 Now they're saying that our staff is
6 failing these students. I understand that, you
7 know, that's all within our control, but they're
8 using that as an excuse to push out this staff,
9 bring in the Courtenay staff because they're
10 higher performing because of their parent
11 involvement.
12 And, you know, I do, I feel bad for you
13 guys because I really thought you were just kind
14 of as an afterthought who can we get to do this,
15 who can we get to move in that is higher
16 performing so that we can make this look like
17 it's okay on paper. And that's, basically, what
18 this whole thing has been is trying to make a
19 way to make it look okay on paper. The
20 populations are different. They're both great
21 schools with great people.
22 But, really, one thing I wanted to say
23 is, I wasn't expecting the decisionmaker to be
24 here today, the bottom line is these schools

1 don't belong to you, I'm sorry. I know you've
2 been put (Applause) in this position by someone
3 that think's that they have great ideas, but
4 these don't belong to you. You're playing with
5 someone else's toys, don't break them.
6 MR. DE LONGEAUX: We have no more speaker on
7 the list. If anyone wants to sign.
8 (Whereupon, a discussion was had
9 off the record.)
10 MR. DE LONGEAUX: Excuse me, we have another
11 speaker here.
12 MS. GALICIA: Good evening, everyone. I
13 think that this meeting was made so that we can
14 support each other, so that the two schools can
15 stay open, and I think that we're just going
16 back and forth here, that one school is better
17 than the other school. If we want them both to
18 stay -- both schools to stay open, we have to
19 work together instead of going back and forth.
20 That's the only thing that I wanted to
21 say, that we need to support one another, that
22 Courtenay needs to stay open, that Stockton
23 needs to stay open, that we need to support each
24 other together instead of going back and forth.

1 It makes sense that each of us are
2 going to say that our students are better. We
3 need to raise our voices so that we're
4 supporting each other. We need to support each
5 other. Thank you.
6 MR. DE LONGEAUX: Anybody else who wants to
7 signup?
8 (Off the record at 8:43 p.m.)
9 (Back on record at 8:54 p.m.)
10 MR. CAWLEY: I'm sorry, ladies and gentlemen,
11 just one more reminder, if you have any written
12 materials that you would like to go into the
13 record or into our note taker, please drop them
14 at this table over here, okay, thank you.
15 (Off the record at 8:55 p.m.)
16 (Back on record at 9:30 p.m.)
17 MR. CAWLEY: Thank you all for coming, it's
18 now 9:30, and we will conclude the meeting.
19 Have a nice evening and drive safely.
20 (Which were all the proceedings
21 had in the above cause this
22 date and time.)
23
24

1 STATE OF ILLINOIS)

2) SS:

3 COUNTY OF C O O K)

4

5 Sandra Di Vito, as an Officer of the

6 Court, says that she is a shorthand reporter

7 doing business in the State of Illinois; that

8 she reported in shorthand the proceedings of

9 said hearing, and that the foregoing is a true

10 and correct transcript of her shorthand notes so

11 taken as aforesaid, and contains the proceedings

12 given at said hearing.

13 IN TESTIMONY WHEREOF: I have hereunto

14 set my verified digital signature this 8th day

15 of April, 2013.

16

17 Sandra Di Vito

18 Illinois Certified Shorthand Reporter

19

20

21

22

23

24

A

abandoned 23:3
abilities 30:12
able 19:20,22 29:10
above-entitled 1:8
abuse 48:11
academic 16:5 17:4 22:17
Academy 57:6
accommodate 52:15
accountable 45:21
accounting 28:23
accurate 7:7
achieving 52:13
action 5:13 7:23 9:10 13:4
actions 10:17 51:13
additional 8:2 11:16 38:23
address 18:8
administration 9:16 21:19 39:14 40:23 41:1,5
Administrative 1:15 4:22
advocate 18:3 37:4
affiliation 26:23 45:8
affiliations 15:13
aforesaid 63:11
afterthought 60:14
age 25:23
agenda 48:22,22
ago 19:13 35:9 46:6
air-conditi... 11:21 25:12 35:15
Aldermen 48:1
allow 23:10 29:9 37:16
allowed 20:5
allowing 16:22
allows 11:7
altogether 18:10
amazing 20:10,15 21:5 21:7 54:20
amenities 39:23
American 45:10
amount 25:19
Amundsen 1:9
analysis 32:5
angry 50:16 54:10
anticipation 10:17
anyway 51:17,20 52:21
apologize 23:3
apology 59:7
appalling 48:5
applaud 19:19
applause 17:21 19:15,16 22:8 25:5,14 26:18 35:16 39:24 40:14 41:21 42:3 44:5,9,17,19 46:13 47:11 47:15 48:17 50:3 51:6 54:15 55:11 56:10 57:22 61:2
Apple 47:9
application 25:6 29:17,21
applied 30:21 38:6 39:2 53:11
apply 20:5,6 31:6
applying 38:22
April 1:8 8:5 15:3 63:15
area 23:6 25:22 31:23 35:4 36:21
areas 11:23
argues 32:1
arm 26:6
arms 37:2
arrived 29:16
arrogant 46:18
art 47:8
arts 16:3 19:6
aside 51:20
aspect 57:13
assistant 20:19 21:21,22 41:1
Assumpaco 2:9 26:21 29:13
assured 51:12
attend 17:2 34:24
attention 13:5
audience 4:8 45:13
auditorium 8:2 39:20
Auffant 2:3 15:12 17:12,12
autistic 33:7
Avenue 23:17
average 30:6
Award 22:17,18
awarded 16:5
Awards 16:6
Azcoitia 6:17

B

backgrounds 16:18
backpack 48:13
backup 32:3
bad 53:12 56:15 57:18 60:12
Barack 47:10
Barbara 6:22 14:8 46:5
based 27:23
basically 26:12 60:17
Beacon 1:4
becoming 53:13
behalf 24:23 36:6
belong 61:1,4
benefit 40:5
Benes 1:19 6:2
best 7:19 30:5,7,7 30:8,9 34:16 55:17
better 9:4 25:11 26:17,18 30:15,15,19 41:5 49:18 54:2 56:16 61:16 62:2
beyond 15:1 54:9
big 36:14 57:24
bigger 41:2
biology 43:18
bizarre 46:2
black 25:3 38:12 43:10,11
bless 45:17
block 41:20 57:24
blue 27:16
Board 6:16,20,22 7:9 7:17,20,21 8:4 13:15 14:8 17:14 34:10 35:5 42:6 43:5 45:15,17
Bon 22:12
born 57:13
bottom 9:6 12:23 13:6 31:5 54:5 60:24
boundaries 9:17 37:16
boy 54:14,21
boys 37:22
break 61:5
breakdown 33:3
Brenda 2:23 53:6 55:24
Brennemann 29:23 44:13
Bridges 3:2 57:1 58:23 58:23
brief 10:13 31:24
briefly 8:14
bring 11:7 60:9
bringing 7:3 26:15
broad 35:8
Brooke 2:13 33:17 38:15,18
brought 10:23 11:4 19:12
brown 25:3
building 5:16 8:20 9:3 9:4,13,15 10:8 11:17 17:1 35:5 39:17,22,24 53:19,19
buildings 11:13
bunch 26:19
business 44:2,16 63:7
Byrd-Bennett 6:22 7:8,11 14:8 46:5

C

calculate 28:21
calling 15:7,10 22:9 26:20 33:16 38:11 43:9 47:2 53:5 56:24
capital 11:18
capture 14:6 19:20,22
careful 13:5
caring 25:7
Carlos 6:17
carry 48:13
case 19:7 28:2 41:17 58:4
Catalyst 32:5
Catherine 2:2 15:11,18
cause 62:21
Cawley 1:14 4:4,13,21 5:10 15:5 19:17 33:19 34:5 38:14 62:10,17
cease 18:17
Center 50:6
CEO 6:22 13:15 14:8
certainly 11:6 45:18
Certified 63:18
cetera 48:6
challenge 11:6 14:11 30:11
challenging 12:11
chance 13:20 14:10 22:3,8 31:13
change 12:12,20 16:11
changed 21:16 36:18
changes 12:10,17 55:22
changing 16:20 18:9 23:12 55:5
charter 57:7
charters 49:22
checked 4:17
Chicago 1:1,9 4:23 5:22 6:6,17 7:1 10:4 12:13 20:8 22:20,21 23:4,19 24:21 29:10 31:23 32:5 34:5,6,10 38:21 43:3,6 43:7 47:12 49:9 51:4,21 55:24 56:1,2
Chief 1:15,17,19,21 4:22 5:21,24 5:24 14:2 51:10,14
child 13:8 18:3 25:4 25:8 27:1 45:3 47:11 48:11 57:2 57:10
children 18:17 19:3,14 24:6 25:1,2 25:3,4,23,24 26:1,7 28:17 29:10 30:9 30:16 33:7 35:2 37:4 40:5,7 42:16 42:19 43:3,7 45:5 47:18 47:23 48:11 49:8 56:2 58:6
child's 18:3,4
choice 18:16 57:9,14
choose 31:13 37:19
choosing 32:20
chopping 57:23
chose 39:23
Christine 2:4,12 15:12 19:24 33:18 36:4
church 48:2
circulated 23:21
cities 48:6
citizens 7:1
city 10:5 11:10 12:7 15:21 18:16,19,22 22:22 36:21 41:14 43:22 43:23 45:19 47:6
Clancy 2:12 33:18 36:3,4
Clark 2:4 8:4 15:12 19:24,24
class 25:2 30:5 32:4 32:8,12,16 32:20,23 34:19 36:14 38:5 48:6 51:24 52:8 59:19
classes 41:3 50:2 52:5 52:7,14
classroom 50:7 52:2
classrooms 32:15 50:4
Claudia 2:11 33:17 34:3
CLC 57:17
clear

McCorkle Litigation Services, Inc.
Chicago, Illinois (312) 263-0052

40:2 44:11 46:15
clearly 39:22 41:10
close 10:19 42:1,2,2 42:12 44:18 59:10
closed 8:19 28:13 34:12 37:3 45:2 52:18
closely 10:2
closest 50:19
closing 5:13,14 15:1 18:24 21:15 26:12 42:23 44:4 52:23 52:23
closings 32:1 51:11
Closure 1:2
closures 17:18 41:8
cluck 49:16
colleague 5:20 13:18
College 43:21 44:3
colleges 47:13
combine 40:21
Commander 6:5,12 10:4
commenced 4:2
commencing 1:10
commentaries 27:11
comments 6:18 7:14 19:20
communicate 7:17
communicated 13:15 17:17
communicates 18:7
communities 16:14 19:5 46:12,24
community 5:18 10:21 17:20,23,24 18:4 21:2,7 25:1,9 26:9 27:5,11,18 27:23 36:10 41:16 43:16 44:1,16 45:19 48:10
compassionate 25:7
competing 55:18
complete 44:10 46:19
completely 16:20 18:5 27:16 48:9 52:24 53:21 57:19
computer 25:12 33:5 34:13,15
concern 42:23 58:22
concerned 42:24
conclude 29:4 31:8 52:20 62:18
concluding 1:11
confidence 48:9
confined 29:11
confirm 15:8 33:23
confusing 39:7
connection 13:8
considering 20:11
consolidated 32:7
consolidating 11:7
consolidations 41:9
contact 13:7
contacting 29:18
contains 63:11
continuation 7:2
continue 5:10 47:8
CONTINUED 3:1
continues 18:18
contract 10:16
contrary 28:8
control 60:7
coordinators 12:18
copies 14:18
copy 3:6 31:24
corporate 48:23
correct 63:10
couldn't 11:9 15:4
Council 43:16
country 29:16 47:14
COUNTY 63:3
couple 38:20
course 34:1
Courtenay 1:3 5:13,14,15 6:2 8:23 9:2 9:12,12,16 10:7,22,24 12:16 15:19 16:3,8,11,13 17:10,13,15 17:17,19 18:1,7,10,11 18:14 19:7 19:11 20:1,2 20:7,17,21 22:13,15,18 22:21,24 23:9,12 24:7 24:14,15,18 27:1,5,15 28:2,6,13,18 28:19,24 29:2,9,15,24 30:13,20 31:11 32:11 33:4,12 34:8 35:13,19 36:5,13,15 36:18 37:1 37:19,22 38:3,18 39:3 39:16,22,23 40:22,24 42:2 44:7,12 50:15 51:8 51:16,21,23 52:8,15,22 52:23 53:9 53:17 54:8 55:10,15,19 56:9,12,15 56:17 57:3,5 57:7 58:1 59:4 60:9 61:22
Courtenay's 20:11 23:1 39:12 41:5 56:18,18 57:23
CP 30:6 34:3
CPC 35:7,8 41:3 54:15
CPD 6:7
CPS 1:13 9:22 11:5 14:3,6 17:21 17:22 18:6 18:18,21,23 19:4 20:5 23:15 26:17 27:21 30:6,6 30:15,23 31:12 36:11 38:8 40:12 40:18 41:14 47:7,21 58:9
CPS's 33:14
crafted 19:13
Craig 1:19 6:2
crap 26:19
craziness 49:23
crazy 46:18
create 18:23 37:11
creates 60:3
crew 58:14
criteria 37:2
criterion 6:9
crying 47:23
crystal 46:15
CSR 1:23
CT 46:5
CTU 10:16
culture 15:21
cultures 27:4 40:22
current 9:11 16:16 17:14
currently 9:1,14 16:23 20:20 21:20
curriculum 12:4 31:20
customized 43:1
cut 48:16

D

date 62:22
daughter 20:3 21:9 22:4 36:11 41:20 56:4,6
daughter's 21:6
daylight 35:8
De 1:16 5:20 13:24 14:2 15:16 22:9 26:20 29:4 29:12 31:17 33:16 36:1 38:11,16 43:9 46:19 47:1 49:2 50:24 52:20 53:3,5 56:24 61:6,10 62:6
deadline 27:19,20
deaf 46:17
deal 57:24
death 36:7
Debby 2:7 22:11 24:19
deceitful 27:20
December 27:21
decent 49:6
decided 34:17
decision 23:14 34:1 42:8
decisionmaker 60:23
decisions 50:18,20,21,22
decline 8:20
declined 35:3
defend 27:6
definitely 51:15
delegate 34:3
deliver 17:3
demand 19:16 35:17,17
denied 18:2
densely 23:17
Department 6:6 10:5
Deputy 1:21 5:24
Derek 3:2 57:1 58:23
describe 13:18
description 9:10
deserve 16:15 17:2,4 19:14 35:16
deserves 25:9 49:22
design 17:17 18:10,14
designated 14:11
designed 7:13
detectors 37:23
Di 1:23 63:5
Diane 2:10,21 26:22 31:19 53:5,8
difference 17:8,10
different 27:4 38:1 40:22 53:1 57:20 58:2 60:3,20
differently 51:17
digital 63:14
diminishing 35:3
diminishment 25:20
disabilities 12:23
disagree 34:14
disappointed 40:18
disappointing 54:9
discretionary 34:18
discuss 5:12
discussion 5:8 61:8
discussions 6:10
disingenuous 18:6
Disney 16:23
disrespect 45:11
disrespectful 17:16
disrupted 45:3
disrupts 48:10,10
disservice 16:13
distinction 28:10
distraught 47:22
district 37:14
Districts 12:14
dis-banished 58:3
diversity 15:21
divide 53:20
documented 32:6 33:22
door 25:5,6 26:6
double 48:5
Dr 7:8,11 31:19
dragged 59:8
drama 33:5
draw 54:20
drawings 54:20
drawn 18:15
drive 48:7 62:19
drop 36:12 62:13
dropped 55:3
due 15:1

E

earlier 27:8
early 7:9
ears 54:3
ed 8:4 28:23 29:1 29:3 34:10
Edgewater 23:19 24:21
educating 16:17
education 30:16 31:19,22 32:14,22 33:1,7,11 41:3 42:6 43:5 45:4 56:11
educator 47:8
educators 25:7
effected 21:14,16 44:9
effecting 53:1
effective 33:1
efforts 17:5
eight 52:14
either

54:17 56:23 57:17
elected 45:12
elementary 1:2,3 10:11 15:19 17:10 17:13 22:19 22:20,22 24:7 36:13 56:5
elements 32:12
Elias 6:5
ELL 34:21 41:4
else's 61:5
Emanuel 49:24
emotional 12:9
employee 24:21
encompasses 6:1
encourages 16:9
energy 53:21
engagement 17:23
Englewood 34:24
English 12:24 29:3
enrolled 9:12
enrollment 8:21 9:21 18:18 20:6 23:1,12 35:3
entered 33:20
entire 20:22 43:6
environment 30:8 37:12 60:4
equivalent 48:24
especially 20:10 28:22
essential 23:7
et 48:6
euphemistic... 42:13
Eve 35:10
evening 4:4,21 6:18 7:15,24 8:13 13:19 24:19 29:13 34:2 51:3 53:7 61:12 62:19
evening's 5:11,17
everybody 5:2 14:9 46:7 46:8 49:19
everybody's 15:8 42:1 49:3
evidence 32:2
example 16:3 41:7
exceed 24:11
excel 16:17
excellence 16:5 17:4 18:22 22:17 29:8
excellent 30:9
excelling 21:10
excited 23:8 53:17
exciting 19:5
exist 18:17
expand 16:22 29:9 40:4
expanded 23:2,3,11
expanding 10:11 16:24 23:9
expect 40:8
expecting 54:6 60:23
explain 5:20
explained 20:21
explanation 8:22
explore 9:22
express 42:23 46:10
extended 5:1
extension 27:21
extra 52:14

F

fabulous 39:19
face 45:12
Facilitator 1:16
facilities 15:1 16:12 25:10,15
facility 11:18,19 58:2
fact 6:20 18:8 21:9 25:21 39:16 58:11
facts 7:19
faculty 28:17
failing 60:6
fair 31:5
fall 49:5
familiar 8:17 51:7
families 18:15,21 23:22 23:23 31:7 38:2,5
family 35:1,2,7 36:7
fancy 39:20
far 9:4 12:6 22:5 49:12
February 27:15 29:17
feedback 6:19,21 27:24 27:24 42:9
feel 21:2 33:24 36:11 59:6 60:12
feeling 36:10 42:18
fellow 7:1
Fernandez 2:6 22:10 24:4 24:6
field 51:5
figure 44:23 54:11
filled 38:5
final 17:18
finally 20:17 29:24 39:3 50:8
financed 34:15
financial 11:5
find 9:24 18:5 36:11 49:24
fine 19:6 50:16 52:9
first 8:15 9:9 15:10 21:12 22:2,7 27:18 41:22 42:7 53:15 54:8,18 59:6
five 29:18 50:6 55:6
flawed 28:22
flip-flop 44:10
focus 19:6
fog 46:10,11
follow 10:15
following 4:1 7:11
fond 40:15
force 58:20
foregoing 63:9
form 13:16 46:1
forth 18:22 28:4 61:16,19,24
forum 17:20
found 21:7 36:22 38:2,8
four 6:23 9:8 27:10 33:9 38:24 43:14
fourth 57:11
four-month 22:4
free 33:24
fresh 11:23,24,24
friends 47:16,17
front 6:3 35:8
full 11:12 28:8 30:24
fund 32:20
fundamental 16:20
fundamentally 18:9 21:16 23:11 36:17
funding 11:11
funds 34:18
Furman 2:17 43:10 45:7,7 46:20
future 36:16 55:2,17
future's 55:17

G

Galicia 3:3 61:12
Gard 2:13 33:17 38:15,17,18
gas 37:22
gem 36:24 37:7
gentrification 25:19
give 8:9 11:23 14:9 31:13,13,24 39:1
given 37:3 39:8 63:12
giving 50:11 58:16
globally 55:18
goal 10:14 19:2
God 45:17
Golden 47:9
Gonzalez 2:22 53:6 54:13,13
good 4:4,21 7:7 22:5 24:19 29:13 30:24 31:13 34:2 40:20 41:11 51:3,24 53:7 54:22 61:12
Governor 48:1
grade 30:7 31:9 52:5 52:6 59:19 59:21,21
grader 24:7,8 29:14 30:1
graders 12:3 29:6 52:4
grades 30:17
graduate 40:13
graduated 41:21 56:4
granted 27:21
great 6:11 20:24 21:1 24:9 30:4 52:13 54:17,23 55:20 56:10 58:9,12,12 58:13,15 60:20,21 61:3
Ground 54:11
grow 30:12
growing 34:22
guess 21:11 48:15 52:6 59:23
guests 5:5
guys 57:24 60:13
gym 39:20

H

half 11:12 50:3
Halloween 35:10
hand 33:21
handed 39:10
handing 37:1
handout 8:12 9:19
hang 28:17
happen 39:11 40:3 55:6
happened 12:13
happening 27:12 35:20
happens 10:14
happy 6:4,15 21:6,6 21:10 22:5 30:20 37:10 39:4
hard 3:6 59:15
hear 6:18 13:21 14:5 19:21 34:16 38:23 44:3 49:12 54:6
heard 6:24 13:20 17:7 22:8,23 27:10 36:15 40:24 47:21 47:24 48:19 48:19 55:14 59:13
hearing 1:5 8:3,6 15:5 27:9 42:5 59:5 63:9,12
hearings 43:21,23 44:3 44:4 46:8
heartsick 36:20
held 1:8
Hello 36:3 55:23
help 6:13 7:3 12:3 13:2 21:8 29:20 30:11 33:22
helpful 9:20
helps 30:10
hereunto 63:13
Hi 15:17 19:24 31:18 40:11
high 1:9 10:10 16:1 16:4,19,22 30:17 31:10 36:17 43:16 43:18 47:15 58:10
higher 8:24 59:9,12 60:10,15
highest 20:13
high-perfor... 24:10
holding 14:14
homeless 34:23
honest 39:21
honestly 60:1
Honor 22:15
hope 5:3 29:8 31:12
Horwitz 2:10 26:22 31:18,19
hours 48:17
housing 35:4
huge 25:18
human 49:4
Humphreys 2:2 15:11,15 15:17,18
hurting 41:12
Hynes 2:24 56:24 57:1,2,2

I

IB 19:6 56:5,7,8
idea 19:8 24:10

41:11
ideas
13:12 39:9
46:3 61:3
II
16:23
illogical
39:7
impassioned
49:15,17 50:13
important
13:4
importantly
47:23
impressive
37:20
improve
16:1 17:5
improved
19:3
Improvement
16:5 22:18
improvements
11:18
included
49:24
including
11:21 23:24
income
20:11,12,14
29:3 32:24
35:4
incorporates
42:9
increased
32:6,9
indicated
10:20
indicates
51:1
indication
9:2
individual
42:8
indoor
52:17
ineffective
35:21
inform
7:18
information
8:9,13 9:19,24
13:6
informed
27:12
inherently
28:22
inning
54:5
input
5:18 7:13,23
inside
11:17
insist
37:6
instruction
31:20
insulted
21:11
insulting
17:16 22:1
27:9
integrate
12:3
integrity
19:2
interchange...
41:16
invest
15:24
investment
11:20 12:5
investments
11:2,11,15,22
12:1
invite
35:19
involved
59:14
involvement
16:10 60:11
iPad
35:15 48:12,13
iPads
12:2 34:17
irresponsibly
23:11
ISAT
24:12
issue
20:8

J

jeopardized
32:17
Jesus
2:22 53:6
54:13
job
40:20 41:5
54:22
join
35:20 46:22
Jones
2:20 47:3 51:3
51:4 52:21
53:4
Joshua
2:5 22:10,13
July
20:17

K

K
63:3
Kaplan
2:16 43:10,12
43:12,13,15
Karen
2:15 38:12
41:19
keep
27:9 31:9
36:23 42:5
55:11,12,16
keeps
36:14 55:5
Keesecker
2:5 22:10,12
22:13
kept
47:24
Keti
2:8 26:21,24
key
7:6,19 8:12
kicked
58:10
kid
55:20,20
kids
24:10 26:2,17
26:18 30:4,8
30:10,19
31:9 40:8
41:15 50:7
55:7,17
56:21
kindergarten
20:4,22 21:3
37:24 38:5
kindergartner
15:19 20:2
29:14 30:2
36:5 53:8
59:21
knowing
21:13
knowledge
30:12 35:6

L

Lab
50:2
labs
11:22 25:12
33:5,5 34:13
34:15 39:19
lacking
36:22
ladies
4:4 62:10
laid
36:8
Lake
36:23
language
4:12,15 5:5
12:24 16:3
24:2
large
32:13 34:22
late
20:17 50:12
launched
17:22
leaders
48:2
leadership
9:16
learn
15:23 30:10
learned
51:15
Learners
12:24
learning
12:13 21:10
36:14 37:12
47:6 52:12
leave
14:18
led
37:19
left
4:19 8:18
14:15
letter
36:6,18
level
8:24
library
33:6 34:12,14
48:16,17
52:18
License
1:24
lies
42:5
limited
29:3
Lincoln
23:20 36:23
56:5,8
list
17:18 20:7,18
21:14 27:14
27:16 28:1,9
28:11 30:2
30:23 31:6
31:15 61:7
listed
20:7 38:7 39:1
39:2 53:12
listen
17:9 49:13,15
listened
17:8
listening
27:2 49:19
59:4
lists
31:1 59:14
literature
42:6
little
36:9 44:23
50:11
live
34:5 41:19
45:7 57:21
lives
18:24 45:2
48:11 57:21
living
13:1 46:11
Local
43:16
located
8:17
location
15:3
Lois
2:20 47:3 51:4
long
25:17 31:1
Longeaux
1:16 5:20
13:24 14:2
15:16 22:9
26:20 29:4
29:12 31:17
33:16 36:1
38:11,16
43:9 46:19
47:1 49:2
50:24 52:20
53:3,5 56:24
61:6,10 62:6
lose
18:18
lost
29:20
lot
8:10,11 13:10
25:21 49:15
53:20
lottery
16:9,16 17:11
18:14 23:5,6
23:13,24
25:6 30:14
30:18 31:10
37:8 56:13
57:9 58:19
lottery-based
16:24 23:1
love
15:20,21,23,24
27:5 59:15
low
20:11,12,13
29:2 32:23
35:3 47:14
LSC
10:19 23:24
45:14
Lyman
2:21 53:5,7,8

M

Magazine
20:9 22:21
magnet
19:6 23:5,23
26:1,2,15
30:21 36:22
main
8:13 58:21
maintain
16:1
maintaining
23:5
maintenance
58:14
man
21:21,23
manage
12:19 26:2
map
8:16,18 9:18
Marc
2:16 43:10,12
43:12,15
March
21:12 27:19,22
Maria
3:3
materials
14:17 62:12
math
29:7 54:19
matter
1:8 31:14
maximum
14:12 52:1
Mayor
48:16 57:20,21
McCutcheon
44:14
McPherson
44:14
mean
48:18 49:12
53:19 58:17
means
28:15,16 43:13
meant
7:16 50:9
media
8:11
Medical
50:6
mediocrity
18:23
meet
25:8 26:8 37:2
meeting
5:18 7:21 8:3
11:5 14:4,24
15:2 18:2
27:18 46:20
61:13 62:18
meetings
18:1 48:24
Member
35:5 45:15,17
members
1:13 6:16 7:9
7:17 17:24
23:24 35:7
44:1,16
memories
40:15
mentioned
10:1 11:15
15:5 27:8
merely
18:7
merge
24:9,16
merger
32:15
merging
30:17 36:19
merit
18:6
mess
22:6
message
7:4 46:4,15
metal
37:23
mic
15:14
Michael
2:19 47:3 49:7
middle
25:2
Military
57:6
minds
49:14
minority
32:24
minutes
14:12 43:14
Miriam
2:18 47:2,4
49:10
missed
29:17
mixed
35:4
model
16:16,20,23,24
19:9 23:2,9
23:13,13
28:16 29:9
36:13 37:1,8
37:13,18,19
38:9 39:15
40:2,4 56:12
mom
59:23,23
momentarily
5:21
money
48:3
month
27:17 53:15
months
6:24 9:8 19:13
27:10 29:18
38:22,22,24
Montrose
23:16
moratorium
32:2
morning
36:13 60:1
mother
37:21
move
28:15,16 58:2
60:15
moved
25:22 28:14,14
moving
58:5
multiply
40:7
music
33:6

N

name's
15:17 43:15
58:23
near
5:1 53:16
needs
4:15 12:9,22
13:9 25:8,9
26:8 34:21

35:23 36:23 50:7 53:20 61:22,23
negatively 51:13
neighborhood 16:11 18:11,12 19:10 24:20 25:14,16 29:11,22,22 30:18 36:20 37:10,17 47:15 48:14 53:12 55:2,4 57:10,15 58:20
neighborhoods 19:4 23:18 37:9 57:19
neighbors 18:13
neither 28:6 56:9
nervous 53:24
network 1:20,22 5:23 5:24 7:5 31:21 51:10 51:14
never 18:11 36:10,16 50:20,21,22
new 4:16 10:7,23 11:11,21 13:9 21:24 30:23 40:9
nine 33:7
nonsense 26:10
north 1:4 23:4,16
notes 63:10
notice 16:6
number 8:24 34:20,21 36:22 40:8
numbers 33:12 38:7 52:10
numerous 43:2
nurtured 10:23

O

0 63:3,3
Obama 47:11
objective 14:4
obscure 59:8
obtained 28:1
obviously 8:15
occasion 49:5
occupied 9:14
October 20:8 30:22
offended 21:18
offered 20:16 39:24
offers 8:23
office 7:5 14:8 21:22 21:23 58:14
Officer 1:15,17 4:22 5:22 14:3 63:5
official 8:6
old 47:14
oldest 56:4,7
once 54:11
ones 24:11 58:15
open 14:21 25:6 26:6,6 35:17 47:24 61:15 61:18,22,23
opening 52:24
open-minded 26:7,7
operating 11:12
operator 14:11
opinion 31:5 48:21
opportunities 7:22 8:7
opportunity 18:2 37:4 39:8
option 29:23 37:11
options 9:21,24 20:5
order 28:1 55:13
organizations 10:22
orient 8:14
outcomes 19:3
outside 14:22
overcrowded 37:15 53:13
overpopulated 55:7
overseen 8:6
over-utiliz... 32:6
owes 59:7
o'clock 59:24

P

packet 21:12,13
page 8:15 9:9,18,18 9:20 11:1,14 13:7 42:7,13 42:22
paint 11:24,24
paper 55:1 60:17,19
parent 15:18 20:1 22:13 27:1 36:6 38:18 45:3 53:8 54:4 58:8 60:10
parents 9:21 15:20,22 16:10 17:4,6 17:16 18:16 19:16 21:7 24:5,17 30:3 33:4 35:19 37:1 42:15 43:24 44:7 44:12,13,13 44:13,14,14 44:15,15 47:22 50:13 50:14,15,21 51:16,18 55:13 56:18 56:21 58:15 59:4,13,17
Park 23:19 36:23 45:8 56:5,8
participant 57:5
participate 29:10
particularly 6:15 32:23
partner 6:11
partnership 6:7
partnerships 10:21
parts 41:16
pass 13:17 37:23
passage 10:6,9 11:16
passed 60:2
paying 13:5 25:23
payoff 48:12
people 4:17 13:20 14:16 18:24 25:22 27:2 34:8 37:10 38:19 41:12 41:12,15 43:20,22 44:2,17 45:13 46:17 48:8,18,19 49:12,15,23 50:19 58:13 60:21
percent 16:9,16 17:11 18:13 20:12 20:13 22:19 22:23,24 23:6,13,22 23:23 29:1,2 29:7 30:14 32:13 37:8 55:4 56:13
percentage 20:11
perfect 24:12
performance 16:2 22:20 30:17 31:10
performing 16:4,19,22 36:17 59:9 59:12 60:10 60:16
permanent 14:19
person 44:3
personally 45:11
personnel 11:17
Pesenti 2:11 33:17 34:2,3 36:2
petition 23:21
Phil 1:21 6:2
Ph.D 31:19
picture 40:3
place 20:15 21:1,5 38:8 54:8 59:3
plan 20:6 32:3 35:23 39:6
planning 16:23 35:23 46:21 59:1
plans 6:14 33:14 43:1
playground 34:14
playing 61:4
police 6:6,10 10:4
poor 25:1
Pope 2:7 22:11 24:19,19
populated 23:18
population 23:10 25:20 26:5 28:23 29:1 34:23 40:16 53:2
populations 60:20
portion 24:1
position 61:2
possibility 23:8
possible 40:6
possibly 11:3
potential 33:9
power 52:6
precedent 16:18,21
Preckwinkle 48:1
premises 27:23
prepared 24:4 53:9 54:16
PRESENT 1:13,18
presentation 5:11
Presenter 1:14
President 47:10
Presidential 47:9
press 46:6
Presser 2:19 47:3 49:7 49:7 51:1
pretty 39:10
pride 37:8
principal 12:17 20:19,20 20:22 21:3 21:21,21,22 40:9 41:2
principals 12:19 29:19
priority 31:3,11
private 18:19
privatization 48:23
probably 14:10 44:20
problem 39:13
proceedings 1:7 4:2 62:20 63:8,11
process 5:19,21 6:23 7:2,12 9:7 13:11,19 17:23 22:4 39:9 51:1
Procurement 1:17 5:22 14:2
product 56:1 58:8
professors 31:22
program 10:9 35:22
programs 9:1 19:5
promise 17:3 59:9
promised 17:21
proposal 16:11 17:14 18:5,9 19:14 39:10
proposals 18:20,22 28:4
propose 44:21
proposed 1:2 7:20 10:18
proud 19:15
proven 16:17
provide 12:2,18
provided 10:9 17:20 18:1,16
providing 10:6 12:15 30:15 43:1
public 1:1,5 4:23 5:22 6:17 7:23 8:3,6 15:5 17:24 34:6 43:7 45:2,17 47:12 48:16 48:17,21 49:8 55:24 56:1,2
publish 27:22
punish 32:19
purpose 5:17 14:13
purposes 33:9
push 60:8
put 13:10 18:22 38:3 49:19 61:2
p.m 1:10,11 4:3,5 8:2,5 15:6 62:8,9,15,16

Q

quality 45:4
quickly 13:16
Quinn 48:1
quote 46:7

R

Rahm 49:24
raise 62:3
raised 57:14
rallied 19:4
ranked 20:9 22:21
Ravenswood 1:20,22
reach 23:9
reaction 13:11
real 41:12 44:11
realize 35:21 44:6
reapply 30:23 31:12 42:16
reapplying 31:4
reasons 54:7
receive 7:23 11:22 27:17
received 11:20 16:6 21:12 38:6 42:9
recess 52:17,18
recipients 22:17,18
Recognition 47:10
recognized

28:9
record
5:9 14:19
33:20 61:9
62:8,9,13,15
62:16
records
37:20
referrals
51:22,23
reflecting
8:19
reform
48:23
regarding
17:15
register
4:17
registration
14:20
regular
47:14
releases
8:11
relocate
16:12 36:16
37:7
relocated
9:3,13 39:13
39:14,15,17
relocating
5:15 16:19
18:8 19:1
relocation
17:15
remain
14:21
remark
14:6
reminder
62:11
renaming
36:24
rep
51:5
report
1:7 14:7
reported
1:23 63:8
reporter
7:4 14:5,18
19:17 33:21
63:6,18
representing
51:21
reprimanded
59:2
reputation
20:24 53:14
requested
19:18
require
25:5
requires
4:8 25:6
research
31:24 32:2,23
48:2
researchers
31:22
researching
38:21
resident
24:20 45:9
resources
9:5 11:8
resource-st...
25:16
responsibility
18:21
responsible
23:14 59:20
responsive
49:20
rest
6:19 58:16
resulted
25:20
results
20:14
retain
37:7
rethink
41:10,18
retired
24:20 40:12
rewarded
17:6
rhetoric
28:12
rich
25:2
Ridge
1:20,22
Risa
2:24 56:24
57:1,2
rise
49:4
rising
28:9
Rogers
23:19 45:8
Roll
22:15
room
33:5,6,6 43:19
45:22 52:21
rooms
33:7,8,10,10
room-by-room
33:3
roots
36:9 38:3
ruin
56:23
rumors
36:15
Rush
50:6,6

S

Sad
49:10
safe
10:6,8 11:16
36:12
safely
62:19
safety
6:8,14 10:2,3
43:1
Salemi
1:21 6:2
Sandra
1:23 63:5
sat
57:16
satisfied
38:4
save
19:22 46:23
48:3
savings
11:12
school
1:9 5:12,13,14
8:23,24 10:8
10:20 11:8
13:9 15:14
16:4,7,12,16
16:19,22
17:3,11,15
17:18,19
18:1,3,11,12
18:12,13
19:10 20:9
20:17,19,24
21:20,24
22:5,16,19
22:22 23:6,9
23:12,13,14
24:24 25:10
25:11,21,23
26:6,11,12
26:16,23
27:13 28:7,7
28:10,19
29:8,15,22
29:23 30:8
30:10,14,18
30:19,21,24
31:9,10,12
31:14 32:1
32:19 34:4,6
34:24 35:1
35:12,19
36:9,17,20
36:24 37:7,9
40:7,16,23
41:2,8,20,21
41:23 42:2,8
42:17,18
43:2,3,16,17
43:18 44:9
45:1,2 47:15
47:18 50:5
51:10 53:1
53:15,18
54:18 55:8
55:11,12,21
56:5,15,15
56:20 57:8,8
57:9,10
58:10,18,20
58:24 59:10
59:14,15,22
61:16,17
schools
1:1,19,21 4:23
5:22 6:1,12
6:17 8:16
9:15,22
10:10,11
11:7,9,11
12:6 15:23
17:5 18:19
18:19 19:1
20:4,13
21:14 22:16
22:20 23:5
25:14,16
26:1,3,8,8
27:6 29:19
30:24 31:4
32:7,11,16
33:13,14
35:17 36:22
37:15,17
38:4,6,21
39:1,2 40:21
42:12,14,23
43:8 44:5,18
45:5,9 46:24
47:12,24
48:6,9,24
49:8,22,24
50:3 52:9
53:11 56:1,2
56:3,21,22
56:22 57:18
60:21,24
61:14,18
school's
53:12
science
33:5 34:13
39:19
score
24:12
scored
29:6
scores
34:7 52:11
scorings
47:14
searching
29:19
Sebastien
1:16 5:20,21
13:18,23
14:2
second
9:20
secret
16:8
security
10:2,3 11:17
30:9 35:11
selective
47:13
self-contained
32:15
sell
40:1
Semantics
28:12
send
28:17 59:9
sending
1:3 25:24
senior
57:5
Senn
58:10
sense
24:16 62:1
sent
47:11
Serikaku
2:14 38:12
40:11,11
serve
23:17
served
32:14
serves
24:24 25:1,2,2
25:3,4
service
45:18
seven
33:9
sham
44:10
share
14:12 49:21
53:10
shared
17:1
she'll
19:22
she's
38:14,15 46:11
46:12
Shiller
2:23 53:6
55:23,24
shingle
28:18
shorthand
63:6,8,10,18
shot
35:8,10 43:3
shouldn't
28:3
show
6:7 14:14 49:1
showing
8:16
shown
9:17
siblings
59:21
side
8:22
sign
4:15 61:7
signature
63:14
significant
11:20 12:5
signing
4:9 23:23
signup
14:21,23 57:9
62:7
similar
32:12
single
18:2 53:2
59:23
sit
5:1 50:12
situation
31:15
Situations
13:1
size
32:4,16,21
34:19 50:3
sizes
32:8,12,23
36:14 51:24
skip
21:3
small
18:13 21:1,20
32:12,15,16
32:23 36:14
37:14 53:19
57:10
smaller
32:20 34:18
smart
47:19
smoothly
13:13
social
12:9
Socoloff
2:18 47:2,4,4
49:3
soir
22:12
sold
35:14 53:22
Somalia
34:10
somewhat
26:5
son
30:5 37:23
43:17 54:18
sophomore
57:6
source
8:13
South
8:4
Spanish
4:9,10,11,12
4:13 5:5
24:2
speak
13:22 14:10,23
15:4 24:23
39:8 43:13
48:19
speaker
14:15,20 61:6
61:11
speakers
2:1 3:1 15:11
19:18 44:21
speaking
19:19 59:1
special
12:22 28:23
29:1,3 32:13
33:6,7,11
34:21 41:3
50:7
specialty
31:20
specific
13:4
specifically
32:3
spectacles
48:7
speeches
14:16
speed
48:5
spend
34:18 44:22
spends
37:21
spent
29:18 38:20,21
38:22,23
spot
29:21,24 31:1
spotlight
16:6 22:16
spots
20:16
Square
23:20
staff
1:13 26:13,15
28:17 45:23
58:13 60:5,8
60:9
stages
16:24
stakeholders
17:19 19:12
standards
24:11
star
28:9
start
15:15 20:3
37:24 46:17
started
4:6 20:4 53:23
53:24 54:19
statistics
28:21
STEM
19:6
STENOGRAPHIC
1:7
step
54:12
steps
44:24
stepson
54:23
Steuben
43:18 56:7
Steven
2:14 38:12
40:11

Stewart
44:13 51:5,5
Stockton
1:2 5:14,15
6:1 8:19 9:1
9:3,11,14
10:8,19,22
11:19 12:15
16:13 19:11
24:17,24
25:10,11,21
26:5,11,12
26:13 27:4
28:24 32:10
32:18 33:2
34:3,12 35:1
36:19,24
37:14,16
39:17 40:12
40:15 41:2
41:20,21,23
42:1,14,17
43:17 44:12
50:14 51:6
51:18,19,23
52:7,15,22
52:22,24
54:14,17,21
54:23 55:8
55:11,15,19
56:10,11,16
56:17,19
57:16 58:5,7
58:24 59:10
59:16 61:22
Stockton's
16:12 26:4
41:6 58:3,19
Stone
23:16
story
32:11 33:14
strategies
33:1
Street
1:4
streets
46:23
strike
51:9 53:16
strip
19:8
student
20:1 22:14
23:22 51:12
53:2
students
6:8 9:11,14
10:7,15
12:10,16,22
12:23,24
13:1 16:15
16:17 17:2
21:24 24:11
30:4,5 32:14
32:20,24
33:10,11,15
34:7,9,20,21
34:22,23
35:2,12,13
35:14,18
41:4 43:24
50:23 52:11
52:12,12
56:18 58:12
59:9,18,19
60:6 62:2
studies
32:7
Submitted
3:6
suburb
45:16
suburbs
18:19 48:8
successful
18:15 19:9
23:2 37:13
38:9
successfully
40:10
Sudan
34:9
sudden
42:24
summaries
7:8
summarize
7:6
summarized
13:16
summarizing
7:10
summary
8:18 9:6,23
10:13
superior
9:4
support
10:6 12:18
13:8 16:10
44:4 59:16
61:14,21,23
62:4
supporting
55:10 62:4
supports
12:9,15
supposed
31:2
surely
46:9
surface
49:21
surprisingly
26:4
surrounding
37:15
survive
24:14,15 34:9
survived
34:9
Sydney
53:23
system
16:9 23:1,24
34:6

T

table
14:20 19:12
62:14
take
5:1 6:19,21
40:7 46:4,14
taken
38:9 54:8
63:11
takeover
21:23 26:16
40:9,23
taker
7:5 14:7 62:13
tangible
53:21
taught
34:6 41:22
taxpayer
45:9
teacher
24:20 32:18
34:11,11
43:18 47:7
55:24 58:24
teachers
10:14,15 24:22
41:15 44:1
44:17 47:22
50:22 51:4
51:19,22
58:12
teaching
35:2 41:22
47:5
team
10:3 35:23
teams
6:13
tears
53:23
technically
21:15
technology
12:4 34:16
telling
24:13 39:12
57:22 58:1
Temporary
12:24
tenant
9:17
tend
27:6
terrible
18:20
test
47:19 52:11
testify
43:20
testimony
3:6 14:17
63:13
therapeutic
50:5
Theresa
2:6 22:10 24:6
think's
61:3
third
11:1,14 13:7
42:22
thought
20:10,15,24
21:2 35:22
36:10,16
40:19 51:7
55:2,8,9
59:7 60:13
thoughtfulness
19:2
thoughts
14:12 53:10
three
7:24 15:10
24:15 33:8
33:10 38:24
52:16
three-month
17:23
thrilled
39:4 40:4
53:18
thrived
47:12
Thursday
7:24
Tim
1:14 2:17 4:21
15:5 43:10
45:7
timecards
14:14
timekeeper
14:13
tired
26:10
told
37:14 39:11,18
42:15,15
51:14
tomorrow
7:9
tone
46:17
tongues
49:16
Toni
48:1
tonight
5:23 6:16,20
8:8 14:1,11
14:22,23
15:4 22:2,7
30:4 32:4
top
20:12 22:19,23
totally
40:22
tour
20:18 53:18
tout
33:4
toys
61:5
transcript
63:10
transcripts
7:7
transfer
40:10
transition
11:3 12:17
13:3 35:12
35:22,24
transitions
10:12
translate
24:2
translating
5:2
translation
4:9 5:6 15:8,9
travel
34:23
treating
41:15
trial
49:1
Tricia
38:12 43:10,11
true
63:9
truly
36:12 37:6
Truman
43:21 44:2
Trumbull
44:14
trusted
20:23
Tuesday
8:5
tuitions
25:24
turn
13:22 19:9
45:12 58:4
turned
21:5
turning
20:14 26:11,14
Tuthorn
2:8 26:21,24
26:24 29:5
two
7:22,24 8:7,16
24:6 27:3
35:9 37:22
40:21 46:3
49:8 52:4,4
52:6 58:21
61:14
type
19:14

U

unconscionable
32:21
undermines
48:9
underperfor...
28:6
underserved
23:4,18
understand
12:10 28:3
34:8 49:18
60:6
underutiliz...
8:20
underutilized
28:7 33:2 50:1
50:2,8
Union
24:22 51:4,22
unique
37:11
unite
55:13
University
50:6
uno
49:21
unsafe
48:14
unswayed
48:21
unwise
32:21
update
12:1
upheaval
18:23
Uplift
43:16 44:15
upset
54:10
upsetting
12:12
Uptown
23:19 24:24
25:18 35:4
36:19 46:23
56:19 57:14
usually
45:12
utilization
28:22

V

validate
28:3
value
32:12
various
25:13,24
verbatim
13:16
verified
63:14
Vito
1:23 63:5
Vivian
2:9 26:21
29:14
voice
17:9 28:5
45:22,24
voices
17:7,8 62:3
volunteer
21:8
volunteered
57:16
Von
43:18 56:7
vote
7:20 45:20
49:6
voter
45:10
Voulgaris
6:5
vulnerable
33:15

W

waging
46:12
wait
20:7 38:6,24
39:2 52:1
53:12 59:14
waiting
20:18 28:8
30:2,23 31:1
31:6,15
38:23,24
walk
10:7 35:6
walked
35:7
walk-in
59:18
wall
19:5,6
war
46:10,11,12
50:14
warranted
11:23
wasted
17:6
website
8:10
week
32:6 37:21
weeks
46:6
welcome
5:11 13:24
24:17 28:18
35:18 42:18
42:21
welcomed
16:15
welcoming
1:4 7:14 8:23
12:6 35:19
42:14 48:5
Wendy
2:3 15:12
17:12 27:7
WHEREOF
63:13
white
25:3
who've
38:6
wider
23:10
WiFi
48:15
Winner
47:9,10

winter
17:22
withdrawn
37:17
wonderful
36:9 37:18
47:17
wondering
42:20
word
19:23
words
54:2
work
21:8 28:20
44:15,24
53:20 59:24
61:19
worked
6:12 9:7 10:2
50:5,10
working
10:3 59:15,24
works
56:13,14,17,19
world
48:6
worse
56:16
worthless
26:14
written
10:16 14:16
31:23 33:20
62:11
wrong
42:20 46:15,16
48:4

Y

yay
41:21
year
10:17,20,24
20:3,22 21:3
29:16 35:9
36:9 43:3
54:18
years
11:21 24:15
34:7 35:9
38:20 41:22
43:6 47:7
55:3,5,6
57:4
young
18:24
younger
57:17
youngest
56:6,7
your
6:18,19,21 7:1
7:13,14,16
13:8,11,12
15:13,13
26:17,18,22
33:24 36:1
42:6 47:1
48:20 49:2
50:24 52:10
you're
8:16 26:12,13
26:14 40:21
45:21 46:18
48:21 52:23
52:23,24
57:22 61:4
you've
22:8 33:19
59:12 61:1

Z

Zaccor
2:15 38:12
41:19,19
Zero
54:11
zone
23:4

$

$130
37:21

0

084-004642
1:24

1

1
6:9
1st
27:22 52:4,5,6
59:21
10
22:23 55:3
10:00
15:6
100
16:9,16 17:11
18:13 22:24
23:6,13,23
29:6 30:14
30:18 31:10
31:21 37:7
56:13
11th
15:3
12
57:4
125
8:4
13th
27:15
13-year-old
35:10
14
56:6
15
2:2
16th
8:5 15:6
17
2:3 55:4
18
22:16
19
2:4

2

2
14:12 54:1
2:00
59:24
20
20:5,6,7 22:19
52:3 53:11
55:5
20,000
7:1 17:24
27:11 42:10
42:11 43:22
47:21
200-plus
28:8
2010
20:8 22:21
2012
22:15 29:6
2013
1:9 63:15
21st
21:12 27:12
22
2:5 52:7,8
22nd
7:21
23
52:7,8
24
2:6,7
25
22:22
25th
20:9 22:6
250
40:7
26
2:8
27
34:7
27th
46:22
275
33:10
28
52:1,3,3
29
2:9 22:17

3

3
42:13
3rd
12:2 59:21
30
17:24 32:13
30-plus
28:24
31
2:10 22:18
31st
27:19,22
32.3
29:3
33.3
29:3
34
2:11 20:13
47:7
35
43:6
36
2:12
38
2:13

4

4th
24:7
4-year-old
54:14,20
40
2:14
41
2:15
41.7
29:2
43
2:16
4420
1:4
45
2:17
47
2:18
488
20:10 22:6
49
2:19

5

5th
29:14 30:1
59:19
5-year-old
54:1
50
23:22
51
2:20
53
2:21
54
2:22
55
2:23
56
52:2
57
2:24
58
3:2

6

6th
24:7
61
3:3

7

7:30
1:10 4:3,5 8:2
15:3
750
21:24
77
20:12

8

8th.
1:8 12:3 29:6
63:14
8:00
8:5 15:6
8:30
14:22
8:43
62:8
8:54
62:9
8:55
62:15

9

9th
54:5
9:30
1:11 14:24
62:16,18
900's
38:7

CHICAGO PUBLIC SCHOOLS CPS

Providing A Better Education For All Students
Stockton Elementary and ***Courtenay Elementary***

Pending Board approval of proposed closure

Current Stockton students will be enrolled at Courtenay Elementary for the 2013-14 school year, unless families choose to enroll their student at another school.

Courtenay Elementary (administration, teachers, staff, students) will be relocated to 4420 N. Beacon St., the building that houses the existing Stockton school.

In other words, students from both schools will be in the Stockton building, led by the Courtenay administration. The Early Childhood Center located on the Stockton campus will continue to provide services for students but will be affiliated with Courtenay. The Special Education cluster programs administered at Stockton will remain in the building, led by the Courtenay administration.

- **Attendance area boundaries:** Stockton's attendance area boundary will be assigned to Courtenay.
- **Enrollment options:** Stockton and Courtenay families interested in enrolling their student at another school can apply via the re-opened Options for Knowledge process. Applications were provided in the transition packets sent home and can be obtained by emailing oae@cps.edu or calling (773) 553-2060. Applications need to be submitted by April 19th.
- **Safety & Security:** CPS Office of Safety & Security (OSS) is working on school-specific plans to address safety for all students. OSS continues to work in close collaboration with the Chicago Police Department (CPD) to plan Safe Passage. Close collaboration with CPD and families will continue through the start of the new school year to adjust plans as needed.
- **Teachers:** Many teachers will follow their students per a joint CPS-CTU agreement. If additional teachers are needed at Courtenay given an increase in enrollment, tenured teachers from Stockton can be assigned to these positions if they are rated in the top two performance rating categories and a position is available in the area they teach. Eligible tenured teachers will be notified of these assignments if the Board votes to approve this action and after organizational and budgetary planning activities have concluded.
- **LSC:** If a school closes, the Local School Council is dissolved at the end of the school year. Per school code, Local School Council elections at all schools will be held in Spring 2014.
- **Partnerships:** CPS will engage the Stockton and Courtenay communities and school leaders to enable the transfer of Stockton's external partnerships and programs.

CHICAGO PUBLIC SCHOOLS CPS

Providing A Better Education For All Students
Stockton Elementary and Courtenay Elementary

As Chief Executive Officer of the Chicago Public Schools (CPS), Barbara Byrd-Bennett is committed to ensuring that every child in every neighborhood receives a high-quality education that prepares them to succeed in college, career, and life. Right now, the reality is that too many of our children are being cheated of the quality education they deserve because they are trapped in underresourced and underutilized schools. Rather than fund half-empty buildings that are costly to maintain and repair, the District will redirect those funds for investments that parents, CTU and CPS agree children need to thrive, such as, air conditioning, a library, counseling and social work supports and technology and science upgrades.

CPS proposes closing Stockton Elementary and welcoming those students at Courtenay Elementary. Courtenay Elementary will relocate to the current Stockton Elementary building.

Stockton Elementary

Why CPS recommends to close this school:

- Enrollment has declined by 17% in last 10 years (574 to 475)
- Building is less than half full

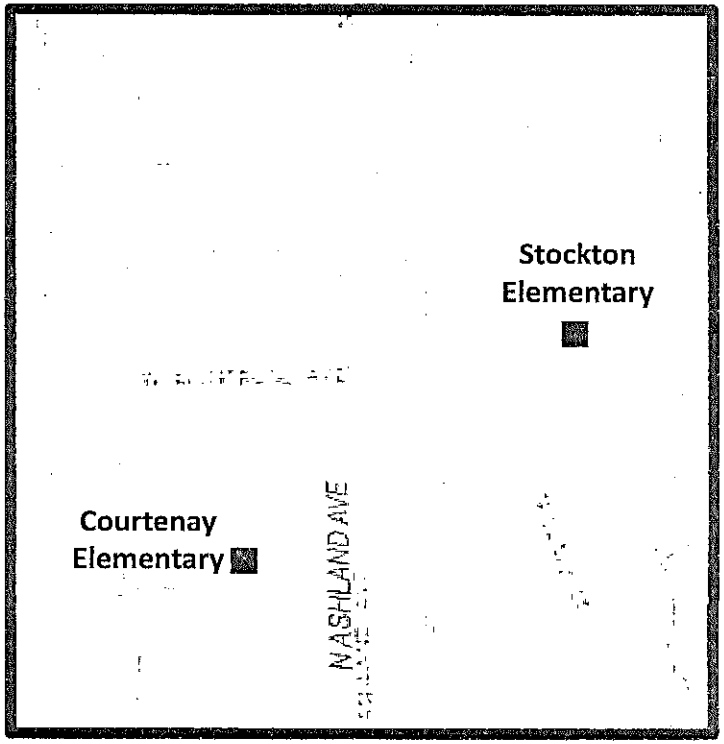

Courtenay Elementary

As a welcoming school, Courtenay will offer:

- A Level 2 school
- A PreK program
- A school safety plan to provide a smooth and safe transition for all students

Courtenay will be relocated to the Stockton building, which will offer:

- Science and computer labs, library and playground
- Air conditioning in every classroom
- CPC at Stockton will continue to serve children and parents in the community
- $14.6 million recent facility investment

CPS has heard your concerns and after a thoughtful, rigorous engagement process, we have looked at every individual school and our decision incorporates the feedback we received from more than 20,000 of you – parents across the city and community members in every neighborhood. A series of supports will be provided so that our students have a safe and seamless transition to a higher performing academic environment at their welcoming school in fall 2013. Please call **311, City Services,** with questions or visit **cps.edu/qualityschools**.

CHICAGO PUBLIC SCHOOLS CPS

Providing A Better Education For All Students
Stockton Elementary and ***Courtenay Elementary***

Pending Board approval of proposed closure

Current Stockton students will be enrolled at Courtenay Elementary for the 2013-14 school year, unless families choose to enroll their student at another school.

Courtenay Elementary (administration, teachers, staff, students) will be relocated to 4420 N. Beacon St., the building that houses the existing Stockton school.

In other words, students from both schools will be in the Stockton building, led by the Courtenay administration. The Early Childhood Center located on the Stockton campus will continue to provide services for students but will be affiliated with Courtenay. The Special Education cluster programs administered at Stockton will remain in the building, led by the Courtenay administration.

- **Attendance area boundaries:** Stockton's attendance area boundary will be assigned to Courtenay.
- **Enrollment options:** Stockton and Courtenay families interested in enrolling their student at another school can apply via the re-opened Options for Knowledge process. Applications were provided in the transition packets sent home and can be obtained by emailing oae@cps.edu or calling (773) 553-2060. Applications need to be submitted by April 19th.
- **Safety & Security:** CPS Office of Safety & Security (OSS) is working on school-specific plans to address safety for all students. OSS continues to work in close collaboration with the Chicago Police Department (CPD) to plan Safe Passage. Close collaboration with CPD and families will continue through the start of the new school year to adjust plans as needed.
- **Teachers:** Many teachers will follow their students per a joint CPS-CTU agreement. If additional teachers are needed at Courtenay given an increase in enrollment, tenured teachers from Stockton can be assigned to these positions if they are rated in the top two performance rating categories and a position is available in the area they teach. Eligible tenured teachers will be notified of these assignments if the Board votes to approve this action and after organizational and budgetary planning activities have concluded.
- **LSC:** If a school closes, the Local School Council is dissolved at the end of the school year. Per school code, Local School Council elections at all schools will be held in Spring 2014.
- **Partnerships:** CPS will engage the Stockton and Courtenay communities and school leaders to enable the transfer of Stockton's external partnerships and programs.

CHICAGO PUBLIC SCHOOLS CPS

Providing A Better Education For All Students

Investments in All Welcoming Schools will Provide Children with a Quality, 21st Century Education

Customized safety plan at every school, including:

- Safe Passage supports to provide safe routes for students traveling to and from school
- Additional security personnel inside each school
- Additional safety technology, such as, entry screening equipment

Facility and capital improvements

- Air conditioning in every classroom
- A library in every school
- New or upgraded technology supports, such as expanded Internet bandwidth
- iPads for all students in grades 3-8
- Improved ADA accessibility
- Upgraded school interiors and improvements such as fresh paint, new ceilings and floors

Academic and social emotional needs of students

- "Welcoming School Fund" for principals to choose programs and services to address academic, social emotional, and language needs of students, such as:
  - Academic intervention programs
  - Activities to bring together parents, staff and students of both schools to build a new school community
  - Lessons and small group interventions for students to build coping and conflict resolution skills
- Principal Transition Coordinators (former CPS principals) to support school leaders, faculty and students of closing and welcoming schools to create a safe, seamless transition and build a new school culture

Specific transition supports will be provided for special student populations. For details, please contact the relevant department.

- For questions regarding **students with disabilities**, contact the Office of Diverse Learner Supports and Services, (773) 553-1800, odlss@cps.edu
- For questions regarding **English Language Learners**, contact the Department of Language and Cultural Education, (773) 553-1930
- For questions regarding **students in temporary living situations**, contact the STLS Department, (773) 553-2242

Current and Proposed Attendance Area Boundaries

CHICAGO PUBLIC SCHOOLS CPS

Current 2012-13 Boundaries

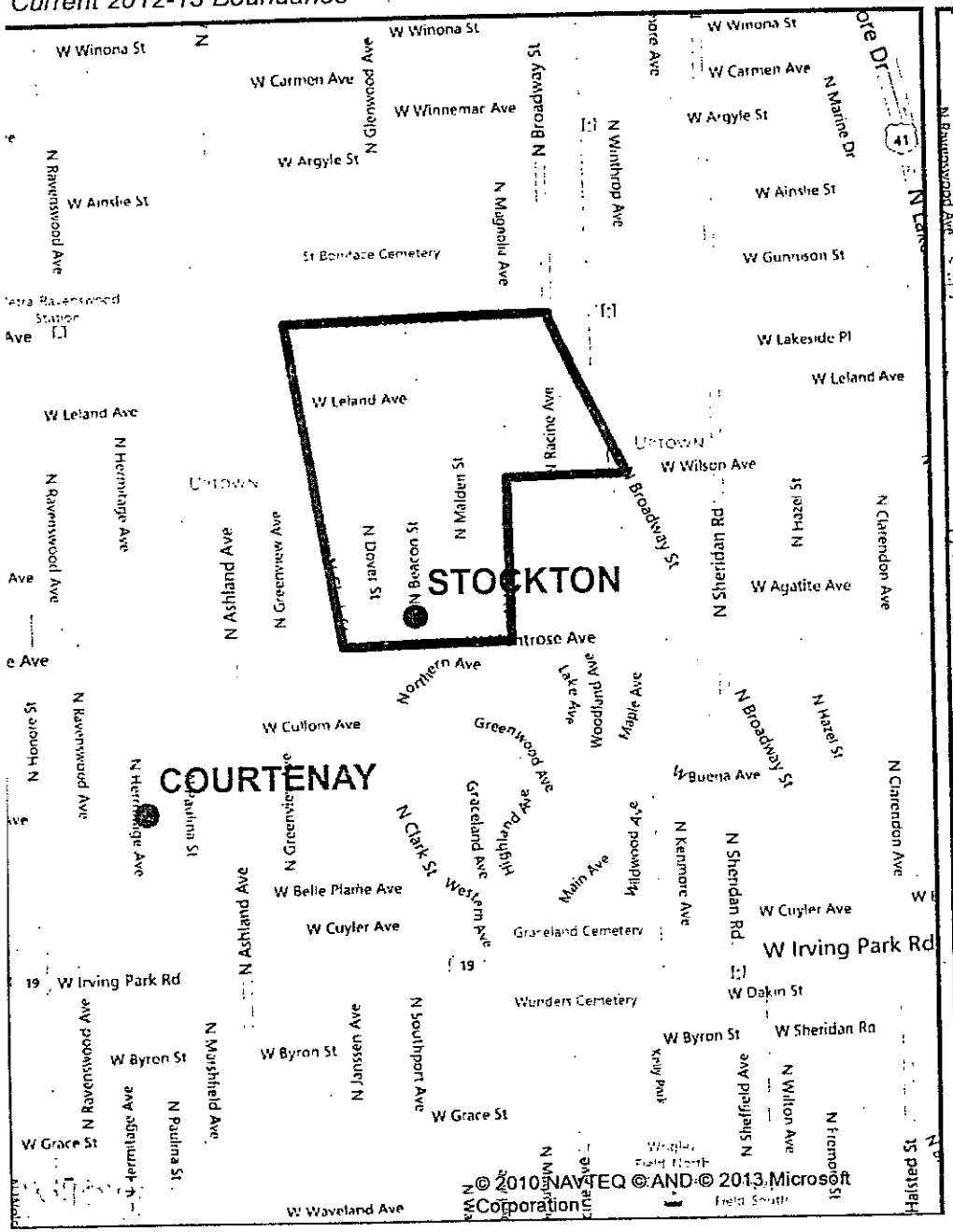

Proposed 2013-14 Boundaries

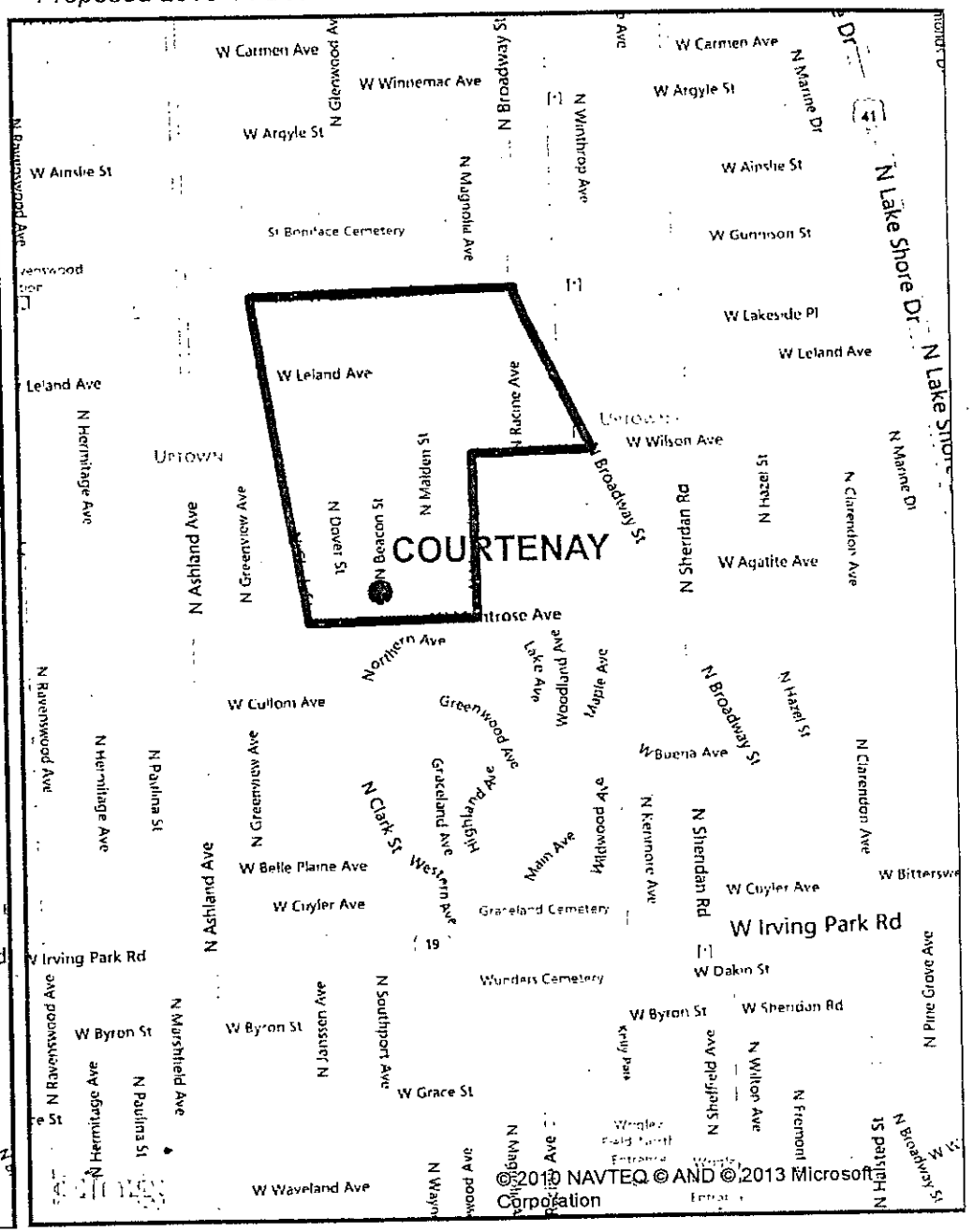

I, like many other parents, love the city. We love its diversity and culture, not to mention its beaches. But to stay here parents also know that they must learn to love the schools around us. We must love them enough to invest our all to improve them and to maintain their high performance. Courtenay Language Arts is an example of a high performing school. It has been awarded the Academic Excellence and Academic Improvement Awards and has received notice as a spotlight school.

The secret to Courtenay is its 100% lottery system that encourages the support and involvement of parents. The proposal to change Courtenay into a neighborhood school and relocate it to Stockton's facilities does a disservice to Courtenay and Stockton communities.

Students deserve to be welcomed into a school whose current 100% lottery model has proven to excel at educating students from all backgrounds. There is NO precedent for relocating a high performing school while completely changing its fundamental model. There is, however, precedent for allowing a high performing school to expand its model. Disney II is currently in the planning stages of expanding its lottery-based model into a shared building.

Not only do students deserve to attend a school that can deliver on its promise of academic excellence, parents like me deserve to know that our efforts to improve the schools around us are not wasted but rewarded. Parents like me need to know our voices are heard, our voices are listened to, and our voices make a difference.

Listen to my voice and let me know I can make a difference: Courtenay Elementary must stay a 100% lottery school.

The current proposal before the board regarding the relocation of Courtenay school is insulting and disrespectful to parents in its design and how it has been communicated. Courtenay was not on the final list of school closures, and therefore Courtenay school stakeholders were not provided with a community forum as promised by the CPS CEO, CPS board and mayor Emmanuel. Over the Winter, CPS launched a 3 month community engagement process with over 20,000 community members over 30 public meetings. Courtenay school was not provided a single meeting and you denied me the opportunity to advocate for my child, my child's school and community.

I find this proposal completely disingenuous in its merit. While CPS communicates that Courtenay is merely relocating, it does not address the fact that the proposal is fundamentally changing the design all together by making Courtenay a neighborhood school. Courtenay had never been a neighborhood school, it has always been a school of neighborhoods. The small school, 100% lottery design that has made Courtenay successful, drawn families from all over the city and provided choice for parents and children will cease to exist.

CPS continues to lose enrollment of city schools to the suburbs and private schools because of terrible proposals like this. CPS has a responsibility to the families of this city to put forth proposals of excellence not mediocrity. If CPS is going to create upheaval in the lives of young people by closing or relocating their schools then they should do so with thoughtfulness, integrity and a goal of improved outcomes for children. In other neighborhoods, CPS has rallied communities around exciting programs like wall to wall IB, STEM focus and fine arts Magnet among others. Yet in the case of Courtenay, it seems as though the only idea was to strip away our successful model

and turn us into a neighborhood school. Perhaps if Courtenay and Stockton stakeholders had been brought to the table months ago, together, we could have crafted the type of proposal that our children deserve, one that we could all be proud of and one that we as parents demand. The Courtenay school community requests that you respond to the following questions:

- Why was no forum scheduled for the Courtenay school community to discuss impending school action and why are you proposing to remove the 100% lottery based enrollment policy, which decreases school choice for parents and fundamentally changes the nature of the Courtenay school design?

Good Evening,

My name is Vivian and I have ~~2 kids~~ a 5th grader Kindergartener that attend Courtenay School. I arrived in the country last year in February and I ~~had lost~~ missed the application ~~time~~ deadline. I spent about 5 months contacting schools, visiting schools, talking with some principals personally or by email, but ~~all of them keep saying me the same "you need to apply online" but I was not even in the country to do it!~~ ~~I had lost my application time.~~
No one could be able to help me, no one gave me any chance.
I know we always have a spot in our neighborhood school but what happens with our "neighborhood school" does not meet the expectations we have for our children?

~~We always want the best for them.~~ My neighborhood school is Brennemann and ~~it is not included in this "the best"~~ for me it is not an option!

Finally, I got a spot on Courtenay because I have a 5th grade son. ~~If I had just my Kindergarten child, probably she would stay out of school last year because I lost the application time once I was not in the country.~~ and Kindergarten was on waiting list

Me, as so many other parents, have kids that are great students. My son is one of the best students of his class, ~~his scores are~~ above the CPS average for his grade, for sure I want the best school, best environment and security for my children; an excellent school that helps my kids to learn more and more, to challenge them every day, that helps them to grow in their abilities and knowledge! For me, for us that what Courtenay is, as a 100% lottery school!

CPS says ~~this changes will be better for all CPS families~~ "Providing a Better Education for ALL students" but how merging this great, high performance, 100% lottery school with a neighborhood school will result in a better school for our kids?

I was so happy at Courtenay that I just applied for one more magnet school last October, that is beside my home but the waiting list is long!

CPS now let us to reapply to new schools but all goods school are full, have no spot and long waiting lits. So, what do we supposed to do now?

At lease we need to have some priority in these schools we are reapplying for. In my opinion It is not fair that we go to the bottom of the waiting list now IF we didn't apply at the same time the other families ~~applied because we were forced too!~~ because we didn't know about this situation before!

So, what I want?

- I want a great school for my kids above all
- ~~If I am forced to attend the new Courtenay, at least we need to~~ not to keep our high performance school ~~with~~ a 100% lottery! or
- Or, I want priority in the schools we reapply ~~now~~! for!
- And I ~~wish~~ hope CPS give us the chance ~~of~~ to choose a good school now and not be only a "matter of luck" in the waiting list situation.

Thank you!

CHICAGO PUBLIC SCHOOLS | CPS

125 South Clark Street • Chicago, Illinois 60603 • Phone: 773.553.1550 • Fax: 773.553.1502

Community Meeting for the Proposal to Close Joseph Stockton Elementary and relocate Courtenay Elementary to 4220 N. Beacon St.

April 8, 2013; 7:30-9:30p.m.

Location: Amundsen High School: 5100 N. Damen Avenue

CPS Facilitators:

Tim Cawley, Chief Administrative Officer
Sebastian De Longeaux, Chief Procurement Officer

Also in Attendance:

Dr. Carlos Azcoitia, Member, Chicago Board of Education
Craig Benes, Chief of Elementary Schools, Ravenswood Ridge Network
Phil Salemi, Deputy Chief of Elementary Schools, Ravenswood Ridge Network
Luis Garcia-Juarez, LocalSchool Council Relations

Brief Summary

The purpose of the meeting was to receive public comments on the proposal to close Stockton Elementary School and relocate Courtenay Elementary School to 4220 N. Beacon St., in accordance with 105 ILCS 5/34-230. CPS officials reviewed the proposed action. There were about 57 community members in attendance and 25 speakers. The speaker comments focused on a variety of topics including: maintaining Courtenay's 100% lottery status and concern over space at Stockton.

CPS Presentation

Tim Cawley, Chief Administrative Officer, welcomed those in attendance and introduced the meeting. He introduced the sign language interpreters and Spanish translators. He asked if anyone required Spanish translation. One attendee raised a hand, the translators moved to sit next to the person who had requested translation. Cawley then presented an overview of the proposal and reviewed the materials available to meeting attendees. Sebastian De Longeaux, Chief Procurement Officer then explained the meeting rules and procedures. The meeting was opened for public comment at about 7:45pm.

Public Comment

Catherine Humphreys, Parent of a Student at Courtenay

Ms. Humphreys said that she loves the city and the culture and to stay she must also love the schools. She stated the proposal to change Courtenay to a neighborhood school is a disservice to Courtenay and Stockton students. She said all students should be welcomed into a 100% lottery model that serves them. She also stated that there is no precedent for relocating a high performing school while completely changing its model. She said parents need to know their voices are heard and listened to.

Wendy Auffant

Ms. Auffant said that the proposal is insulting and disrespectful to parents. She stated that Courtenay was not on the list of proposed closures and was not provided a community forum as promised by CPS. She said the proposal is not to merely relocate the school, but to fundamentally change the model by making Courtenay a neighborhood school. She said Courtenay was a school of neighborhoods. She said CPS loses enrollment to the suburbs because of proposals like this. She stated that CPS has the responsibility to put forward proposals with thoughtfulness, integrity and with the goal of improved outcomes for children.

Christine Clark, Parent of a Kindergarten Student at Courtenay
Ms. Clark spoke about the application and lottery process to enroll at Courtenay. She said she thought Courtenay was amazing because it was ranked 25th in all Chicago elementary schools and had 77% low income students. She said she was offered a space at Courtenay in July and took it. She said the Assistant Principal explained that there was no Principal. She said she was most offended when she received a packet that said Courtenay's administration was taking over. She said there is no Principal, just an Assistant Principal and one man in the office. She then said this is the first chance she has had to speak and that she did not know it was a four month process.

Joshua Keesecker, Parent of a Student at Courtenay
Mr. Keesecker stated awards received by Courtenay including 2012 honor roll school, spotlight school, top 20% of performance in CPS and in 2010 Courtenay was ranked as the 25th elementary school in CPS. Mr. Keesecker said that Courtenay has a 100% lottery based system and that the model should not be abandoned. He said the north zone of Chicago is underserved by lottery schools. He said maintaining 100% lottery school is essential. He said he is excited to expand but the Courtenay model should not be changed. He said that Stone is the only lottery school north of Montrose to serve the densely populated Uptown, Edgewater, Rogers Park and Lincoln Square areas. Mr. Keesecker concluded his remarks in Spanish, loosely translated to: Maintain a 100% lottery school in Uptown for more students.

Theresa Fernandez, Parent of Two Students at Courtenay
Ms. Fernandez thinks that the merger of these two schools is a great idea. She said that Courtenay can survive. She said that if there are any Stockton parents in the audience, "welcome to Courtenay."

Debby Pope, Retired Teacher
Ms. Pope is a resident of Edgewater and employee of the Chicago Teachers Union. She said she was here to speak on behalf of Stockton. She said Uptown deserves a school that serves black, brown, white – any child who comes to the door. She said Stockton does not require a lottery application to find caring and compassionate educators to meet the needs of every child. She said that it was noted that the facilities at Stockton are much better, that there are computers and AC. She said that it was time all neighborhood schools have those facilities. She said Uptown gentrification is what diminished Stockton. She said there are a lot of people who do not have school aged children or who send their children to magnets because their children get into

magnet schools. She said this proposal is turning Stockton around, it is not closing Stockton. She said that CPS is saying to a bunch of staff that "you are worthless." She concluded by stating that CPS is bringing in staff because they know what is better for your children. She said "It's a bunch of crap."

Keti Tuthorn, Parent of a Student at Courtenay
Ms. Tuthorn is a Courtenay parent. She said after listening to people speaking that there appears to be two very different cultures. She said they both love and want to defend their schools. She said we keep hearing that this has been going on for four months that 20,000 people participated, yet she was informed about this proposal the 21st of March. She said Courtenay was not on the list that came out on February 13th. She said it came out of the blue and that Courtenay's first meeting was after the March 31st deadline. She said it was deceitful for CPS to say this was predicated on community feedback. She said the proposal should be invalidated because the community did not have a voice. She said Courtenay is not underperforming or underutilized. She said they are full with 200+ on the waiting list. She said that if Courtenay is being moved all of it has to move, that the model has to move. She said to expand the model and allow all children to participate.

Vivian Assumpaco, Parent of Two Students at Courtenay
Ms. Assumpaco arrived in the country in February of last year and that her 5th grader and then Kindergartner were admitted to Courtenay through waitlists. She said Brennemann is her neighborhood school and it is not an option for her. She said that Courtenay is the best environment for her children. She said Courtenay challenges them every day. She asked how merging a 100% lottery school will create a better education for all students. She said all good schools are full and that there are waiting lists. She said she wants priority in schools she is applying to now. She said that she wants to keep a high performing, 100% lottery school or she wants a chance to reapply.

Diane Horwitz, PhD
Ms. Horowitz has a PhD in education, with a focus on curriculum and instruction. She said she is from a network of over 100 education professors and researchers in the City that has written a research brief that argues there should be a moratorium on school closings. She said that both Courtenay and Stockton value small class size and that both have 30% special education populations, with many children in self-contained classrooms. She said small class size is in jeopardy and that Stockton should not be punished for doing right by students. She said it is not only unwise but unconscionable. She said there are three rooms at Stockton not being used for other purposes and asked how all of Courtenay would fit. She said it doesn't add up.

Claudia Pesenti, Stockton Chicago Teachers Union Delegate
Ms. Pesenti is the CTU delegate at Stockton and has taught at CPS for 27 years. She said her students are not test scores that they have "survived Sudan and Somalia and the CPS Board of Education." She said that Stockton has a computer lab, library and playground but they are not financed with the latest and greatest technology because Stockton spent money on smaller class

sizes. She said there are students who are English Language Learners, Special Education students, homeless students and students who travel from Englewood to Stockton. She said that to her knowledge, a Board member has not walked through or in front of the CPC (child parent center) where someone had previously been shot. She also said that a 13-year old was shot on Halloween eve. She said that students will not be sold out for air conditioning or an iPad or anything else they deserve. She demanded Stockton to stay open. She said we welcome our students so we don't need a welcoming school.

Christine Clancy, Parent of a Student at Courtenay
Ms Clancy spoke on behalf of another parent who could not attend due to a death in the family. She said this family laid down roots at this little school and wonderful community and that their daughter is safe and cared about. She said they never thought the school would be fundamentally changed and that they are heartsick. She said that parents are up in arms because the school did not meet the criteria to be closed that they were not given an opportunity to advocate. She said she came to insist that this gem of a school be relocated and maintained as 100% lottery. She said neighborhood schools are wonderful but that is not the model we chose. She said they had found their place in CPS and don't want the successful model to be taken away.

Brooke Gard, Parent of a Student at Courtenay
Ms. Gard explained that the process of researching, applying and being accepted to schools in Chicago took months. She said her family was thrilled to be accepted at Courtenay and they have been very happy. She said the plan is illogical and confusing. She said that the community was not given time to process and speak about the proposal and to come up with other ideas. She asked what part of Courtenay was being relocated. She said that no one chose Courtenay for the amenities that are being offered at Stockton. She said this proposal is not the way to expand the model.

Steven Serikaku, Stockton Graduate and CPS Retiree
Mr. Serikaku has fine memories of Stockton. He said that he is disappointed in CPS and that whoever thought up the plan did not do a good job. He said that the action did not make sense because Courtenay does not have a Principal, the schools have two different cultures and Stockton has English Language Leaners and Special Education cluster programs. He asked why CPS was proposing this action. He said that CPS is hurting real people. He said that the City and CPS are treating students, teachers and communities like they are interchangeable parts. He urged the Board of Education to reconsider the proposal.

Karen Zaccor, Community Member
Ms. Zaccor lives a block from Stockton, her daughter graduated from Stockton and she taught at Stockton. She said don't close Stockton; don't close Courtenay; don't close any school. She said that the Board of Education lied when it stated in materials that its proposals incorporated feedback from 20,000 people. She said it did not because 20,000 people said "don't close our schools." She said that the materials discuss welcoming schools and that some Stockton parents

were told they would have to reapply and do not feel very welcome. She said that she is concerned that it is taking school closings to provide customized safety plans.

Marc Kaplan, Local School Council at Uplift High School
Mr. Kaplan's son went to Stockton and is now a biology teacher at Von Steuben High School. He said that of the 20,000 people who spoke at community meetings he did not hear one person say we support closing schools. He said none of the Courtenay parents were there because they didn't think their school was affected. He thinks parents from all impacted schools need to work together to make sure schools do not close. He said he proposes that attendees figure out next steps after this community meeting. He said we can have the quality schools we need.

Tim Furman, Community Member
Mr. Furman lives in Rogers Park. He is a resident, tax payer, voter and American. He said he wants to address elected officials and in the case of the CPS Board of Education, in any other community, Board members would be voted for and be held accountable to voters. He said to please tell Barbara Byrd Bennett that not everyone "got it" at the community meetings and that he thinks she is living in a fog. He said he thinks she is waging war on these communities. He said that people will be on the streets on the 27th to save the schools of Uptown, to save the schools in all of the communities.

Miriam Socoloff, CPS Teacher
Ms. Socoloff was a CPS teacher for 34 years. She said that she is an arts educator, a Golden Apple winner and a Presidential Recognition winner (President Barack Obama). She said she sent her children to CPS schools and they were admitted to some of the most selective colleges in the country. She said that CPS has heard from 20,000 distraught teachers, parents, and children to keep their schools open. She said people are communicating that these proposals are wrong. She said the proposals drive people to the suburbs and undermines confidence in the schools. She said it is child abuse. She said the pay-off would be an iPad, an iPad to carry through unsafe neighborhoods to homes without wi-fi and that perhaps they could go to libraries, except that library hours were cut. She said that CPS has not heard anyone. She said CPS has an agenda of privatization and corporate reform. She asked Board Member Azcoitia to be a dissenting vote.

Michael Presser, Community Member
Mr. Presser has two children that attended CPS. He said that CPS already has the answer in their minds. He said that CPS will listen and be kind on the surface but then give UNO a share of schools. He said that the Lab School is one of the great underutilized schools in the City. He said he taught at a therapeutic school with 5 students per classroom and that those students received something that was meaningful for them. He said that he wants the decisions to be made by people who are the closest to the situation. He said decisions are never made by parents, teachers or students.

Lois Jones, Chicago Teachers Union Field Representative for Stewart and Stockton

Ms. Jones said that she spoke with the Network Chief after announcements were made and was assured that not one student would be negatively affected by the actions. She said she is the class size coordinator for the CTU and has never received a referral from Courtenay or from Stockton. She said that she does not care about what numbers or test scores say. She said there are 3 rooms not being used at Stockton and does not know how 8 classrooms from Courtenay will fit. She said there is not room at Stockton and that the proposal is closing Courtenay, closing Stockton and opening a completely different school.

Diane Lyman, Parent of a Student at Courtenay
Ms. Lyman said that like others, she applied to 20 schools and was waitlisted. She said her neighborhood school is not bad, but is becoming overcrowded because of its reputation. She said the energy at Courtenay is tangible and that after her second day at school her daughter said that it was much better for her. She said she is beyond disappointed, beyond angry and upset trying to figure out what her next step will be.

Jesus Gonzalez, Parent of a Student at the Stockton Child Parent Center (CPC)
Mr. Gonzalez said that Stockton is a great school. His son can read, do math and completes drawings that are amazing for a 4 year old. He said he has lived in the neighborhood for 20 years and that it keeps changing. He asked what will happen over the next 5 years. He asked if the school will become overpopulated. He said he is supporting Courtenay – they want to keep their school and he said Stockton wants to keep their school. He said the students should not be competing Courtenay vs. Stockton but competing globally. He said he wants his child to have a great school and he thinks he has it.

Brenda Shiller, CPS Teacher
Ms. Shiller works for CPS, her children attend CPS schools and she is a product of CPS. She said her children went to Stockton and one is at Von Steuben and the other at Lincoln Park IB. She said they received a great education at Stockton. She said she does not think Courtenay is bad, or better or worse than Stockton. She said Courtenay works for Courtenay parents and students and that Stockton works for Uptown.

Risa Hynes, Parent of a Student at Courtenay
Ms. Hynes lives in Uptown and believes that the neighborhoods around Courtenay and Stockton are very different and that the Mayor lives in one and not the other. She stated that if Courtenay gets a better facility then Stockton is diminished. She said she wants to stay at a school that is lottery and asked why CPS would force them together.

Derek Bridges, Teacher at Stockton
Mr. Bridges feels that someone owes Courtenay parents an apology because they were pulled into the action because Stockton students needed a higher performing school to attend. He said that all of the Courtenay parents mentioned waitlists and said that he wished he had that support from all parents at Stockton. He said he has 5th grade students who care for their siblings for a number of different reasons. He said Courtenay performs higher because of parent involvement.

He said they are both great schools with great people. He concluded by stating, "you're playing with someone else's toys, don't break them."

Maria Galicia
Ms. Galicia thinks this meeting shows that parents should support one another. She said people are going back and forth that one school is better than the other. She said if parents want them both to stay open, parents have to work together. She said that parents needed to raise their voices and support one another.

There was no public comment from 8:43pm to 9:30pm.

At 9:30p.m. the meeting was adjourned and Tim Cawley thanked all attendees for coming.

CHICAGO PUBLIC SCHOOLS

For the Proposed Closure of Stockton Elementary

(Sending) and Courtenay Elementary

(Welcoming at 4420 North Beacon Street)

Public Hearing

STENOGRAPHIC REPORT OF PROCEEDINGS had in the above-entitled matter held on April 11th, 2013, at Amundsen High School, Chicago, Illinois, commencing at 7:30 p.m., and concluding at 9:30 p.m.

CPS STAFF MEMBERS PRESENT:

MR. TIM CAWLEY - Presenter,
Chief Administrative Officer

MR. SEBASTIEN DE LONGEAUX - Facilitator,
Chief Procurement Officer

ALSO PRESENT:

MR. CRAIG BENES - Chief of Schools
- Ravenswood Ridge Network

MR. PHIL SALEMI - Deputy Chief of Schools
- Ravenswood Ridge Network

Reported By: Sandra Di Vito, CSR

License No.: 084-004642

1 SPEAKERS

2

3 * Ms. Natasia Lopez 17

4 Ms. Cassandra Vickas 20

5 Mr. Gene DeRamos 22

6 * Mr. John Humpherys 24

7 * Ms. Melanie Bienemann 26

8 Ms. Cynthia Heywood 29

9 * Ms. Mila Cohen 31

10 Ms. Megan Cusick 35

11 Ms. Kandalyn Hahn 36

12 Ms. Stacy Walker 39

13 * Mr. Alonzo Rivas 40

14 * Ms. Lindsay Annunzio 42

15 Ms. Corinna Chou 44

16 Mr. Brad Reed 46

17 Mr. John Tuggle 49

18 Ms. Lavera Lee 53

19 * Mr. Malisa Rakanovic 54

20 Ms. Keti Tuthorn 56

21 Ms. Kerry Martin 59

22 Ms. Christine Clark 61

23 * Student SP 65

24 * Ms. Romana Puente 66

SPEAKERS CONTINUED

Ms. Tamiye Meehan	67
Mr. Patrick Lyman	69
Ms. Brooke Gard	71
Ms. Taryn Kurth	74
Mr. Jesus Gonzalez	76
Mr. Derek Bridges	77
Ms. Maria Galicia	80
Mr. Pete Winninger	82
* Ms. Melanie Bienemann	84
Ms. Symantha Lancaster	85
Ms. Keti Tuthorn	88
* Ms. Malisa Rakanovic	90
* Ms. Claudia Pesenti	92
* Ms. Melanie Bienemann	95
Alderman Marc Kaplan	96
* Ms. Melanie Bienemann	97

* - Submitted hard copy testimony

1 (Whereupon, the following
2 proceedings commenced at
3 7:30 p.m.:)
4 MR. CAWLEY: Let us begin the meeting
5 tonight. First of all, thank you, very much,
6 for coming out this evening to be with us and to
7 tell us what you think about the action that
8 we're proposing.
9 My name is Tim Cawley, I'm the
10 Chief Administrative Officer for Chicago
11 Public Schools, and with me up here is
12 Sebastien De Longeaux, our Chief Procurement
13 Officer. I'd, also, like to introduce you this
14 evening to our Network School Chief,
15 Craig Benes, and his Deputy, Phil Salemi. And
16 with us, also, is the principal at Courtenay
17 School, Dr. Joanne Percel.
18 And, importantly, we have with
19 us from the Chicago Police Department
20 Commander Voulgaris from the 19th District.
21 Since the safety of our children is so
22 important, we've worked very closely with the
23 police on developing safety plans and the
24 Commander's presence here tonight think is

1 evidence of that great partnership.

2 Tonight is the second community meeting

3 to hear your input regarding the -- the closure

4 of the Stockton Elementary School and the

5 receiving school being Courtenay and the

6 relocation of Courtenay into the Stockton

7 building. The -- we met on Monday night, some

8 of you were here that evening as well. And

9 following tonight, there will be one more

10 opportunity for community input and that is at a

11 public hearing on April 16th, down at our

12 offices at 125 South Clark, and that will be at

13 8:00 p.m.

14 And these three meetings are the

15 culmination of a four-month process whereby

16 Dr. Byrd-Bennett and the Board have sought input

17 from communities throughout Chicago about our

18 proposal to consolidate schools, because we feel

19 that the input from the community is so

20 important in guiding our decisions. And, so,

21 the process has now, actually, led to us hearing

22 from over 20,000 of Chicagoans about the changes

23 that are being proposed.

24 The -- the forum of tonight is very

1 similar to the first meeting, and that is we'll
2 have a handout that has some information for
3 you, and then our goal is to hear from you.
4 This is not a question-and-answer period, and I
5 know that can be frustrating to some people, but
6 it's very difficult for us to have all the right
7 people to answer all of your questions at every
8 one of these meetings. So, instead, we have
9 information on the handout on where you can ask
10 questions. Any questions that you ask tonight
11 will be posted on the website with responses,
12 and other questions can be asked on those
13 websites or in the phone numbers that are listed
14 there and we will be sure that everybody gets an
15 answer to their question.
16 So, we -- in fact, the questions that
17 were asked at the first meeting and other
18 meetings around the city are -- will be posted
19 on the website in the next couple of days.
20 It'll take us a few days to get them all posted,
21 but you'll be able to find them at the website
22 that's at the bottom of your handout.
23 Meeting summaries will, also, be
24 captured there. As you can see, we have a court

1 reporter who's capturing every single word
2 that's said tonight, as well as a note taker
3 who's summarizing the meeting, the questions,
4 the key comments, and all of that will be
5 shared, the transcripts and the summaries will
6 be shared with Dr. Byrd-Bennett and the Board,
7 and the summaries will all be posted online so
8 that everybody can see what is happening at this
9 and every other meeting that's going on around
10 the city.
11 Now, one of the things that we've heard
12 in the meetings that have taken place already,
13 we started this process in this round on Monday,
14 but what we're hearing, there continues to be a
15 lot of concern about safety. And, so, I want to
16 reiterate some of the things that are in your
17 handout, but make a very clear point to reassure
18 people on safety.
19 First of all, each and every one of our
20 welcoming schools will receive support in a
21 program we call Safe Passage where community
22 workers line a route that many of the children
23 will travel to the school to make sure that they
24 have a safe route to school, a safe passage to

1 and from school. These routes are -- routes are
2 planned with the Chicago Police Department. And
3 once we get their input, we'll be coming to the
4 communities and with the LSC and parent groups,
5 sitting down to make sure we've got this right.
6 So, there will be time for parent input into the
7 safe passage routes to be sure that we're doing
8 this the right way.
9 Secondly, every welcoming school, in
10 this case, Courtenay in the Stockton building,
11 will be receiving extra security. So, the
12 original Stockton security will stay in the
13 building because they know the kids and we want
14 to have additional security there in addition to
15 the Courtenay security staff. So, there will be
16 additional personnel in the school.
17 Third, every school will receive
18 upgraded technical supports like alarms, and
19 making sure that the entry cameras work, and the
20 entry doors all are functional. So, we're going
21 to make sure that the infrastructure is sound
22 from a security standpoint.
23 Fourth, beyond the safe passage route
24 input, we're going to have other community

1 hearings on any safety issues that you think are
2 relevant. So, we're going to have an
3 opportunity for parents and community members to
4 weigh in on that.
5 And, then, finally, in addition to the
6 Police Department, we're, actually, working with
7 Streets and San, CTA, and the Department of
8 Buildings to identify other things that might be
9 on the path for -- of our students on their way
10 to school on the way now to the Stockton
11 building, Courtenay and the Stockton building,
12 that might be on the way that are uninviting or
13 suggest a lack of safety. So, we're working to
14 make sure that the -- the -- the routes are
15 safe, are clean, and are something that are
16 comforting to families and students as opposed
17 to make them feel threatened.
18 Now, the -- the various safety actions
19 are described in this handout, but there's a lot
20 more in it, so I'd like to take a few minutes to
21 take you through this. And this is the exact
22 same handout that was provided at the first
23 meeting. So, you should have it, it looks like
24 there, it's two pages stapled together with

1 printing on both sides.

2 On the first page, you'll see a map in

3 the middle that shows Stockton and Courtenay,

4 and on the left you see the -- why we believe

5 that Stockton needs to close, it's

6 underutilized, the building is less than half

7 full.

8 As a welcoming school, Courtenay will

9 offer a better school, a better opportunity for

10 the students of Stockton, and, also, a Pre-K

11 program, and we'll make sure that there's a

12 safety plan, as I'd mentioned.

13 When Courtenay's located in there, the

14 combined building, obviously, we're going to

15 make sure that it's got updated science and

16 computer labs, library, and a playground,

17 air-conditioning in every classroom, and the

18 Child-Parent Center at Stockton will continue to

19 serve parents and the community. And that's

20 something that not every school has, as you all

21 know.

22 The Stockton building is quite a

23 facility. We've invested almost $15,000,000 in

24 recent years in Stockton and it will receive

1 additional investment this summer in preparation
2 for the combination of Courtenay and Stockton.
3 If you go to the back of the first
4 page, the second page in the handout, it has the
5 details of what's being proposed with the
6 current Stockton students being enrolled at
7 Courtenay unless the families choose to enroll
8 their students elsewhere, and there's some
9 options down below on what they could do for
10 that, Courtenay students, obviously, will still
11 stay in the school of Courtenay but they'll be
12 relocated to the building that currently houses
13 Stockton. So, both schools will be together
14 under the Courtenay administration in the
15 Stockton building. And, then, the Stockton
16 attendance boundaries will be assigned to
17 Courtenay.
18 For enrollment options for parents who
19 would like something other than this, we've got
20 details in the second bullet underneath the box
21 that show what to do, we're reopening the
22 process for the Options For Knowledge Program,
23 and it has the details for that and the deadline
24 of April 19th. Other schools are, also,

1 available and parents can choose to apply at
2 other schools outside of the Options For
3 Knowledge Program.
4 I've talked a lot about safety and
5 security already. From a teachers' standpoint,
6 there's an agreement that, whenever possible, we
7 will have the teachers follow the students to
8 the new school. So, Stockton teachers who are
9 displaced will have an opportunity as extra
10 positions are needed for the combined enrollment
11 to stay as part of the faculty at the combined
12 Courtenay-Stockton School. The LSC for Stockton
13 will be dissolved and the Courtenay LSC will be
14 the LSC for the combined school. And, then,
15 finally, any partnerships that Stockton and
16 Courtenay have will be the community will work
17 together to try to retain those with
18 community-based organizations and others.
19 On the third page of the handout, it's
20 a summary of the things that we're doing to make
21 our welcoming schools a positive, nurturing
22 place for students, and whenever possible, to
23 create the kind of spark when students return on
24 August 26th that makes them excited about being

1 in the new school.

2 So, we're investing in facility and

3 program improvements, we are upgrading the

4 technology and providing iPads that will be

5 incorporated into the curriculum for all 3rd

6 through 8th graders to help those kids move into

7 a real 21st Century learning environment. We'll

8 look at the walls and the ceilings throughout

9 the Stockton building to try and identify what

10 they need to have that fresh look when the

11 students return.

12 And between now and then, we'll be

13 investing in social emotional supports for

14 students at both schools. Going through a

15 change like this can be challenging, and we

16 recognize that. And, so, the two principals are

17 working together with additional supports to

18 help students understand this change, understand

19 what's been proposed, understand the process

20 that we're going through to recommend this to

21 the Board for the May 22nd vote, and then,

22 ultimately, depending on the outcome of that, to

23 help them through that process.

24 And we have retired CPS principals who

1 are serving as principal transition coordinators
2 to support both principals, so that they as the
3 principals can get that extra help they need to
4 manage the change on top of their current
5 responsibilities of managing everything else
6 that's going on in the school.
7 Now, some students have special needs,
8 and we recognize that, and in this case, we know
9 there's a number of students who will need extra
10 care during the transition. And, so, at the
11 bottom of that third page in the box, you can
12 see that there are phone numbers and e-mail
13 addresses for resources that will help with
14 those transitions for students with disabilities
15 or special learning needs, for English Language
16 Learners, for students in temporary living
17 situations. And each one of those students will
18 receive a customized plan to help them through
19 this transition which we acknowledge can be
20 challenging for them.
21 Finally, on the back of the handout are
22 the maps showing in a little bit more detail
23 Stockton and Courtenay. And in this situation,
24 because the attendance boundaries for what's

1 currently Stockton will just go to the combined
2 school, the map doesn't change very much except
3 that the new school will be called Courtenay in
4 the -- in the Stockton building.
5 And by the way, on what the school will
6 be called, that's another question we often get.
7 It really is up to the LSC to decide what the
8 new school will be called.
9 So, with that, this is an important
10 resource for all of you. We've tried to pack as
11 much into a short handout as we can. There are
12 plenty of people standing by to answer your
13 questions as in -- within the district to make
14 sure this transition goes smoothly.
15 So, with that, I'd like to hand it over
16 to Sebastien De Longeaux who will walk you
17 through the process for your input tonight and
18 explain how we will go through this. And I know
19 we already have a number of speakers lined up,
20 so we'll get to that very quickly.
21 MR. DE LONGEAUX: Good evening. So, my name
22 is Sebastien De Longeaux, and I'm the Chief
23 Procurement Officer for CPS, and I will be your
24 facilitator for tonight.

1 As Tim mentioned, the purpose of this
2 meeting is really to listen from you regarding
3 the proposed school actions. So, please, note
4 that there is both a court reporter who is here,
5 Sandra, and a note keeper -- a note taker,
6 sorry, Katie, to record all of your comments
7 that will be reviewed by the CEO and the School
8 Board.
9 Because we want to provide everyone who
10 has signed up an opportunity to speak, each
11 speaker will be given 2 minutes to share his or
12 her thoughts. We have a timekeeper, Derrick,
13 sitting here who will be holding up timecards
14 that will show each speaker how much time they
15 have remaining.
16 If anyone has a written speech or other
17 testimony materials you would like the CEO or
18 the School Board to review, please, leave copies
19 of these documents with the court reporter so
20 that they can be part of the permanent record.
21 The speaker signups will remain open
22 throughout the meeting and -- but -- and you
23 must signup if you want to speak, you cannot
24 just showup. Please, go outside, signup if you

1 want to speak, and somebody can signup multiple
2 times if we have time.
3 Please note that the comment period
4 will last until the scheduled end time of the
5 meeting which is 9:30 p.m., and will not go
6 beyond due to the closing of this facility.
7 As a reminder, this is a second of
8 three meetings before Board vote, the first one
9 took place on Monday, April 8th. In addition to
10 this one, we have a public hearing at CPS
11 Central Office on Tuesday, April 16th, from 8:00
12 to 10:00 p.m.
13 Now, at this time, I would like to ask
14 that the first three speakers to, please,
15 line-up at the microphone. So, I'm calling
16 Speaker No. 1, Natasia Lopez, Speaker No. 2,
17 Cassandra Vickas, and Speaker No. 3,
18 Gene DeRamos, to, please, come up. Can you,
19 please, state your affiliation to the school and
20 your name.
21 MS. LOPEZ: My name is Natasia Lopez, and I
22 have two children currently enrolled at
23 Courtenay Elementary School.
24 Okay. I chose to send my children to

1 Courtenay because of the negative experience we
2 had with our neighborhood school. Although the
3 neighborhood school has some of the amenities
4 Courtenay is lacking and is under the guide of
5 Principal Sandra Carlson, a former teacher from
6 Hawthorne, it's still a failing school and it's
7 failing its students.
8 With overpacked classrooms, some
9 holding as many as 37 students, my son struggled
10 to hear his teacher. When see-through mesh
11 backpacks we issued to all grades, I worried for
12 my son's safety.
13 Time and time again, we read and hear
14 that reduced class sizes in early grades are one
15 of the few educational strategies proven to
16 increase learning and narrow the achievement gap
17 between ethnic and racial groups. My son is a
18 testimony to this. He went from being an
19 underperforming student during his kindergarten
20 year to a 2nd grader that is outperforming his
21 peers. This happened because of Courtenay
22 School.
23 As a single Hispanic mother raising
24 three boys, I have little options when it comes

1 to their education. And I know all too well
2 what the odds -- that the odds are against us.
3 Magnet schools gives families like mine
4 who are unable to move to better school
5 districts a chance at an equal opportunity for
6 our children.
7 I am speaking today because I am
8 against the CPS proposal and I will not tolerate
9 CPS turning Courtenay into a neighborhood
10 school. I have made sacrifices, spending $150 a
11 week taking my children to and from school
12 ensuring they receive the best education
13 possible. The efforts I have been making may
14 end up being fruitless. We are now at the mercy
15 of a failing budget plan.
16 Studies done by the U.S. Department of
17 Education have proven that students from poor
18 and minority backgrounds experience two times
19 the performance improvement than the average
20 student in a small class setting. This merge
21 will have negative effects on both Stockton and
22 Courtenay students considering their
23 demographics. It is unfair to overburden
24 Stockton with more students. It's unfair and

1 unbelievable the way CPS has classified --
2 that's it?
3 MR. DE LONGEAUX: No, you still have --
4 MS. LOPEZ: Okay. Normal class sizes as
5 underutilized. A good education for our
6 children is a right that parents should not have
7 to stand here and fight for today. Families
8 should not have to live in fear that their
9 school could be the next to shutdown. In an
10 increasingly scary world that our children are
11 growing up in, they need stability in knowing
12 that the grownups and their schools are here to
13 protect them.
14 How does the City of Chicago plan to
15 keep gang violence and crime rates down? How do
16 they expect to break the cycle?
17 MR. DE LONGEAUX: Finish your sentence.
18 MS. LOPEZ: How can we have a succeeding
19 school system when they are closing the doors on
20 opportunities that all our children and families
21 are counting on.
22 MR. DE LONGEAUX: Thank you.
23 MS. VICKAS: Hello, my name's
24 Cassandra Vickas, I have two children at

1 Courtenay.

2 And I have, actually, come to say that

3 I do not think that is a bad plan. This is a

4 good plan only because CPS is in a budget crisis

5 and they are planning on closing schools,

6 anyway. I have known for a long time that

7 Courtenay was on a list and could possibly be

8 closed.

9 The two schools are very close

10 together, they have similar populations even

11 though the demographics are different, but

12 Courtenay's never had the facilities and I think

13 our children getting this opportunity to have

14 the facilities and to take our good school model

15 and absorb and help the Stockton children and to

16 make their school even better relies solely on

17 us as parents, teachers, administrators, and

18 students. The building doesn't make the school,

19 the people make the school. And this is the

20 kind of a challenge that we can expect.

21 My only reservation is that I would

22 like to hold CPS accountable and make sure that

23 they support us. Because if you're asking us to

24 make this sacrifice and asking us to take this

1 challenge, we cannot be left hanging. Both
2 schools, their students, the administration, the
3 LSC, we need to be able to provide for all these
4 children. We don't want to hear that there's a
5 transition fund, we want to see it. We don't
6 want to hear that the textbooks will be there,
7 we want them there the day school starts.
8 What we need if we're going to do this
9 is your support. Thank you.
10 MR. DE LONGEAUX: Thank you.
11 MR. DERAMOS: Hi, my name is Gene DeRamos,
12 I'm a parent at Courtenay, we have one child
13 there.
14 I rise in favor of the proposal as it
15 stands as well, though, I must tell you my wife
16 and I came to this conclusion with some level of
17 anxiety. The reason being, of course, is that
18 we're tremendously satisfied with our current
19 circumstance. We feel we're in a first-class
20 academic institution, we, also, feel we're in
21 one where our child feels safe and doesn't have
22 to concern himself with aggressive or bullying
23 behavior from his peers. We want to see that
24 preserved and we're concerned about it.

1 And my words to Mr. Benes is that
2 whatever -- whatever coming out of this
3 resulting entity has to have the same thing. It
4 has to have the ability to be a one class school
5 in the near term, our kids need to feel safe,
6 and I don't mean so much walking to school
7 because, quite frankly, I'm an Uptown resident,
8 and the area of Uptown where this school is
9 located is about as safe as the area where
10 Courtenay's located (Applause). If you look at
11 the stats, they're very, very similar.
12 Courtenay's not all about talent, but the area
13 where the school is is extraordinarily safe.
14 So, I don't see that as a particular concern.
15 One thing I do want to -- to say,
16 though, is, I think there's great potential
17 here, great potential, but there's, also, great
18 risk. And having seen the "synergies" that come
19 out of mergers, it can be very lucid and those
20 synergies don't materialize unless they're made
21 to happen. I think that's going to take a
22 strong effort on the Courtenay community as well
23 as the Stockton community. But I think a
24 third-party has to be involved, and as I've said

1 to Craig Benes, I think there has to be a formal
2 level of accountability at the Network level so
3 that we have an equal partner in this and the
4 Network is just as invested in the success of
5 enterprise as we are. I think if those
6 conditions are there, we could have a stellar,
7 stellar situation.
8 Thank you, so much.
9 MR. DE LONGEAUX: Thank you. I'm now calling
10 Speaker No. 4, John Humpherys, Speaker No. 5,
11 Melanie Bienemann, and No. 6, Cynthia Heywood.
12 Can you, please, state your affiliation with the
13 school.
14 MR. HUMPHERYS: My name's John Humpherys, I'm
15 an attorney and a parent of a Courtenay student.
16 The Courtenay parents I know are,
17 generally, supportive of the -- the proposal's
18 goals to create more efficient schools and
19 educational opportunities for strong families.
20 We want success as much as you do and but we see
21 two significant impediments to your success:
22 The first is practical. Making
23 Stockton and Courtenay a neighborhood school
24 means that after the Courtenay students graduate

1 and leave, the students that come -- all the
2 students will come from the Stockton boundaries,
3 boundaries that currently don't send enough kids
4 to Stockton to fully utilize the school. In
5 eight years, Stockton will be right back to
6 where it is today underutilized but with a new
7 name, although, we learned tonight, that might
8 not even be the case, the name might change.
9 This means that the Board will -- CPS will not
10 accomplish its goal for utilization and
11 efficiency. My question is to, please, tell me
12 how Stockton's building will not be
13 underutilized in eight years.
14 The second is legal. The CPS's
15 proposal calls Courtenay a, "Welcoming School,"
16 but in reality, closing Courtenay -- it closes
17 Courtenay without granting us our procedural
18 rights. If the Courtenay-Stockton transition
19 goes through, Courtenay ceases to be Courtenay,
20 it loses the building it's been in for decades,
21 it becomes a neighborhood school and loses it's
22 lottery-based model and its students move to a
23 lower performing school, and maybe its name, so
24 it's gone. All the while depriving us of the

1 process and benefits granted to schools proposed
2 for closure, because we were not a due to close
3 school and notified that we were going to be
4 closed.
5 Any legal scrutiny will see through the
6 CPS's semantic jujitsu to not come right out and
7 say that they are closing Courtenay. But the
8 Board can't say that because Courtenay in no way
9 fits with the -- the CPS model for closure, it's
10 academically high-performing and it's not
11 underutilized, it's the opposite of that.
12 We have viable solutions to these
13 impediments: That is keep Courtenay a
14 lottery-based school wherever it is located.
15 Thank you.
16 MR. DE LONGEAUX: Thank you.
17 MS. BIENEMANN: Hi, I'm Melanie Bienemann,
18 and I'm a proud parent of JB of CPS Courtenay
19 Elementary Language Arts Center.
20 Courtenay is a Level 2 school by CPS
21 standards. It only went to a 2 ranking from a 1
22 ranking during the reconfiguration of the school
23 levels. By my standards, it's the best CPS
24 school my daughter has ever attended.

1 As a Level 2 school, Courtenay is not
2 on the list of closing schools, however, what
3 you're proposing, essentially, does close
4 Courtenay. The only thing left will be its name
5 and teachers, and maybe not the name now.
6 Courtenay has great teachers, but the
7 teachers need a good leadership and support to
8 remain great. Courtenay is currently a small
9 school with 100 percent lottery -- open
10 enrollment lottery and no neighborhood
11 boundaries. The parents embrace the diversity
12 and choose -- chose Courtenay for their
13 children.
14 It's essential that Courtenay remain
15 100 percent lottery -- lottery to be successful.
16 And there's just too many transitions occurring
17 in a short period of time for Courtenay to
18 remain successful when you're combining two
19 schools, doubling or tripling the size, hiring a
20 new principal on a rushed fashion. There's no
21 way to maintain its integrity and its scores
22 with all these transitions at one time.
23 I work at Lurie Children's Hospital.
24 We planned for, like, five years for the move.

1 They made procedural changes for, like,
2 three years in advance. Six months before and
3 after the move, no administrators were allowed
4 to make any procedural changes.
5 My daughter's in kindergarten, that
6 doesn't mean I don't know my way around CPS. I
7 studied CPS schools for two years to prepare for
8 J's enrollment because J deserves the best. She
9 was a self-taught reader at 3-and-a-half and she
10 has an amazing memory. She's had no -- she had
11 no problems at daycare up until that point. She
12 had a few transition problems with us at home,
13 but she had a very rough preschool start at age
14 4. She was expelled from her first preschool
15 class in CPS in the first semester. And the
16 second semester, the neighborhood school said
17 they couldn't deal with J in a classroom with
18 one teacher with 28 children.
19 But Courtenay loves J, the
20 administrators love her, she's doing wonderful,
21 everybody loves her, she knows her 1st grade
22 teacher, she knows her 2nd grade teacher, she
23 already knows those people, she's prepared to
24 move forward with those teachers.

1 With this transition, I don't know
2 what's going to happen to her. There's going to
3 be so many transitions in a short period of
4 time. We deserve to keep the Courtenay model
5 intact as much as possible so that teachers and
6 students are allowed to do their best work.
7 MR. DE LONGEAUX: Thank you.
8 MR. CAWLEY: I want to clarify my comment
9 since it's been brought up several times. The
10 only way the Courtenay name will change is if
11 the Courtenay LSC chooses to change it. That is
12 the only body that will choose to change the
13 name. So, nobody else can come in and do that,
14 don't feel like it's on the Board. That is the
15 only body that has the power to change the name.
16 I just want to be very clear about that, okay?
17 MS. HEYWOOD: My name is Cynthia Heywood, and
18 I'm a teacher at Courtenay, and, also, an LSC
19 member.
20 I am here to read a statement that was
21 written by Courtenay teachers, actually, to the
22 Stockton community, the Stockton teachers, and
23 then I have a few personal comments.
24 "Dear Stockton teachers, in light of

1 the proposed situation and after feedback from
2 April 8th's community meeting, we, the Courtenay
3 teachers, feel it is important for you to know
4 our thoughts and feelings.
5 In the event that our schools merge, we
6 want you to know that we hold your staff in high
7 regard. We know that there are great teachers
8 at Stockton. This proposed merger will be very
9 difficult without you. And we will look forward
10 to working together for the good of our new
11 school. Our goal is to make the new school the
12 best school it can be, and that is that it is
13 structured to meet the needs of all our future
14 students.
15 We, like you, value high-quality
16 teaching and small class sizes. We plan to find
17 an administration that values that as well. We
18 look forward to meeting and working with you in
19 the near future.
20 Sincerely, the Courtenay teachers."
21 On a personal note, Courtenay's only
22 been a lottery school for two years, and that
23 was a strategy to keep us open because our
24 enrollment has been small as long as I've been

1 at Courtenay. Previously, we took everyone who
2 walked through the door. We had high
3 expectations for every student. The students
4 worked hard, we worked hard, and our scores went
5 up. That had nothing to do with the building or
6 the lottery.
7 A school is not the building, a school
8 is the community, and we believe that we can be
9 a community with the people who are currently at
10 Stockton. Thank you.
11 MR. DE LONGEAUX: I'm now calling speaker
12 No. 7, Mila Cohen, Speaker No. 8, Megan Cusick,
13 and Speaker No. 9, Kandalyn Hahn.
14 MS. COHEN: Hi, I'm Mila Cohen, I'm the
15 mother of a special needs student at Courtenay.
16 I have a daughter in second grade in special
17 education at Courtenay.
18 I strongly oppose this proposal and how
19 it was presented. The Mayor says the time for
20 negotiation is over, yet this is ironic since
21 there was no negotiation as far as I could see.
22 There's no dialogue and, certainly, no
23 transparency.
24 Courtenay was never on any closing list

1 and why should it be. An Illinois Spotlight
2 School, it's in the top 25 schools and Chicago
3 Magazine selected it as the second most
4 promising school in Chicago. And it
5 accomplished this with a high percentage of low
6 income students. The only reason it's not
7 concerned Level 1 is because there wasn't
8 significant movement above already high scores.
9 By this logic, CPS would downgrade Harvard for
10 not improving every year, too (Applause).
11 CPS calls this a relocation and
12 Courtenay a welcoming school, but these are just
13 euphemisms. By changing its size and its
14 enrollment policy, CPS is destroying everything
15 that makes Courtenay Courtenay. Courtenay
16 should be a model of how to run other schools in
17 the system, not punished for its success. In a
18 system with few choices, and a Mayor and CEO who
19 tout school choice, CPS is reducing choice by
20 eliminating a proven school, with involved
21 parents dedicated to their children's education.
22 As far as I can see it, the only
23 rational explanation for this proposal is that
24 Courtenay has the misfortune to sit on a piece

1 of real estate attractive to developers.
2 Rational, but not ethical (Applause). Taking
3 two well-utilized, functioning schools and
4 cramming them together until they're busting at
5 the seams, selling public land, and then
6 inviting charter schools into the area, even
7 Margaret Thatcher would be impressed by the
8 audacity of CPS (Applause).
9 Charter schools take my property tax
10 dollars but won't serve my daughter because
11 children with special needs are not profitable.
12 Both Stockton, where my daughter attended
13 preschool, and Courtenay serve these populations
14 and serve them well.
15 With these schools, the myth of
16 underutilization is based on the apparent
17 inability of CPS to perform basic arithmetic,
18 ignoring the small class sizes mandated by the
19 State for special needs students.
20 My daughter is safe and happy at
21 Courtenay. It's a small school, the staff know
22 her name, and the students are kind to those
23 with differences. A larger school, a more
24 crowded school, and a change in environment

1 would be harmful to her and all children with
2 special needs.
3 I imagine you're not hearing from as
4 many special needs parents as are furious
5 because, frankly, parenting children with
6 developmental differences takes a lot of time
7 and energy. We already have to fight with CPS
8 to fulfill the requirements of our children's
9 IEPs. To us, this is further evidence of CPS
10 not caring about our children. Society is
11 judged on how it treats its most vulnerable
12 populations. With this action, CPS is in
13 flagrant violation of the social contract.
14 Finally, my son is entering
15 kindergarten next year. Transforming Courtenay
16 into a neighborhood school slams the door shut
17 on sibling preference. Having my children
18 attend two or, eventually, three different
19 schools is ludicrous and a hardship, like this
20 entire proposal.
21 Thank you.
22 MR. CAWLEY: Excuse me, could you put the
23 written comment over there.
24 MR. DE LONGEAUX: Calling Megan Cusick.

1 MS. CUSICK: Good evening, I'm a CPS parent,
2 but, I'm, also, a member of a neighborhood
3 school organization in Rogers Park, and we are,
4 also, a member organization of North Side Save
5 Our Schools.
6 I wanted to speak, specifically, to
7 some procedural concerns and I had no intention
8 to speak until, Mr. Cawley, you spoke at the
9 earlier meeting and I wanted to address some
10 specific concerns that I think the community
11 has.
12 There is a large turnout here for this
13 meeting, there was not for the earlier meeting,
14 and you commented on that. And I think it's
15 important to acknowledge the fact that our Mayor
16 has said in the press that the time for
17 negotiating is over and he has shut the door on
18 parents, and community members, and children
19 (Applause), and that makes this process a sham.
20 My other concern is that we're talking
21 about stability and doing this in the best way
22 for children. You have a few months to do this.
23 And we know that kids need more stability than
24 that.

1 And, Mr. Cawley, you got a two-year
2 reprieve for moving to Chicago because your
3 daughter (Applause) needed stability in her
4 schooling. So, I know you appreciate what these
5 children need as well. And what's good enough
6 for your child should be good enough for the
7 children of this -- these communities as well.
8 And my last comment is, you had
9 mentioned that you are in partnership with the
10 Chicago Police, and I absolutely commend the
11 Chicago Police for stepping up, they've got a
12 very difficult job to do because this is going
13 to wreak havoc on communities, however, your
14 partnership should be with the parents, the
15 teachers, and the students (Applause). The
16 partnership needs to be with parents, teachers,
17 and students. Thank you.
18 MR. DE LONGEAUX: Can you, please, hold your
19 applause during the speech so the Courtenay
20 reporter can really hear what is being said and
21 report it accordingly.
22 MS. HAHN: I'm a Courtenay parent. I spent
23 over four years looking at schools for my son.
24 I toured over three dozen CPS schools, maybe

1 more, I lost count.

2 When I saw Courtenay, I knew I was

3 seeing something special. It was a small

4 school, there were small classrooms, and there

5 were low numbers. This was more than just a

6 nicety for my son. My child has special needs.

7 And in a room with too much noise, movement, and

8 activity, he can't think much less learn.

9 The numbers in classrooms at Courtenay

10 can only continue to be this way because of a

11 lottery admissions process. Even before the

12 lottery status, the parents I've met were making

13 an active choice to enroll their children at the

14 school. These parents cared enough to drive out

15 of their -- out of their neighborhood to a

16 school they felt was better for their kids.

17 Administrators and concerned parents

18 reflected in the scores seen at Courtenay with

19 the challenges that can sometimes come with the

20 school that has 72 percent low income students.

21 These parents consciously chose to go to a

22 school without the bells and whistles of a big

23 facility. No auditorium, separate gym,

24 full-time arts, music, or other specials

1 teachers. They went in spite of this because
2 the teachers, the teachers who have chosen
3 Courtenay, many of them for much of their
4 career, because of the culture that they've
5 created, these parents chose Courtenay.
6 Courtenay teachers are committed to a
7 positive behavior model like no other school
8 I've seen. Teachers weave a positive behavior
9 model into their everyday teaching, really truly
10 school-wide and not just lip service. Just ask
11 my son about the rewards he works for. The
12 teachers can do this because they weren't
13 overwhelmed by classrooms that were too big.
14 We turned down a spot for my son at a
15 gifted kindergarten program. We turned down a
16 spot for my son at Agassiz, a school with a
17 four-language program, a theatric drama program,
18 and a fully loaded building. We did this
19 because we knew what was important, that my kid,
20 and I believe for these other parents, their
21 kids were the focus at Courtenay and would be
22 supported to learn.
23 To turn Courtenay into a neighborhood
24 school without lottery admissions to control

1 size would be to lose what made it special, what
2 brought me and other parents who saw what made
3 it special there. If you don't want
4 twice-gifted kids like mine, committed active
5 parents like myself and the others I have met,
6 takeaway Courtenay's lottery status.
7 We'll do what we have to for our kids,
8 for our own kids, and CPS may lose us for good.
9 MR. DE LONGEAUX: Thank you.
10 I'm now calling Speaker No. 10,
11 Stacy Walker, No. 11, Alonzo Rivas, and No. 12,
12 Lindsay Annunzio.
13 MS. WALKER: Hi, I'm Stacy Walker, my kids
14 attend Courtenay School.
15 I propose that they go to -- I mean,
16 that we go to Stockton because our kids deserve
17 a better facility and -- oh, I'm sorry, that our
18 kids go there for the better facility and our
19 teachers go there to help the students and we're
20 going there to embrace Stockton, not to turn
21 them away, not to turn away what they don't
22 have. Two hands are better than one, so it's
23 better that we go to that school to help those
24 children perform at a higher level -- higher

1 level because they said no child left behind.
2 And why should we not go there because of things
3 that are not going right to leave children
4 behind. Every child deserves a better
5 education. And if we can do that to them, then
6 we're just throwing away our future and our
7 children are supposed to be our futures.
8 That's it.
9 MR. DE LONGEAUX: Thank you.
10 MR. RIVAS: Good evening, my name is
11 Alonzo Rivas, I am a parent of a student at
12 Courtenay Elementary.
13 My wife and I chose Courtenay
14 Elementary for our daughter over other schools
15 that were arguably better, because we
16 immediately recognized the value of this
17 educational model, it's diversity, and how the
18 administration and the staff were welcoming and
19 fostered parental involvement in their
20 children's education.
21 For the past month, I have been
22 following the debate over the relocation of our
23 stool to the building currently occupied by
24 Stockton Elementary and the merger of both

1 student populations. It is my opinion that this
2 plan does not benefit either Courtenay or the
3 Stockton students.
4 First, I do not believe that the
5 District is going to be able to keep lower class
6 sizes, a hallmark to both schools, by merging
7 Stockton and Courtenay student populations as it
8 has been representing. It is especially true
9 given the fact that both schools have sizable
10 special education populations, both about
11 30 percent, which necessarily and by law require
12 lower class sizes.
13 Secondly, while the District has
14 started -- has stated that only Stockton
15 Elementary is closing and Courtenay will become
16 the welcoming school, your plan, in effect, is
17 closing both schools. Courtenay, as we know it,
18 will cease to exist because it will become a
19 neighborhood school and a neighborhood where
20 most, if not all, of our current students and
21 families do not have any ties.
22 The Stockton children and their
23 families, on the other hand, will suffer because
24 the administration, many of the staff at their

1 current school that they have known over the
2 years will be replaced with a new administration
3 and staff that is unfamiliar with their
4 community.
5 For these reasons, I am opposed to the
6 merger of Courtenay and Stockton and support the
7 movement for keeping the current Courtenay model
8 which has proven to be highly successful over
9 the years and to keep it as a 100 percent
10 lottery school. Thank you.
11 MR. DE LONGEAUX: Thank you.
12 MS. ANNUNZIO: Hi, my name is
13 Lindsay Annunzio, I'm a middle school science
14 teacher at Courtenay School, I'm, also, one of
15 the LSC Teacher Chairs.
16 I wasn't here on Monday, but I feel
17 after hearing what happened that Courtenay's
18 culture was misrepresented and I hope the few
19 points I make tonight will show you what I mean.
20 Courtenay School has a long history of
21 educating all children. In fact, Courtenay
22 School was one of the first in the district to
23 include the model. To this day, educating those
24 with special needs is one of our highest

1 priorities.

2 Back in the '90s, Courtenay was the

3 first school in CPS to educate HIV positive

4 children. When those children succeeded at

5 Courtenay, HIV positive children were then able

6 to attend other schools within CPS.

7 The lottery is something that is new to

8 Courtenay. Up until two -- up until two years

9 ago there was one requirement, you walked

10 through the door. And we, the teachers, loved,

11 nurtured, and every child -- and educated every

12 child that did. And even though we weren't a

13 lottery school, at the time, we still achieved

14 high scores.

15 To the Stockton community, please know

16 that if this merger does take place, your

17 children, parents, and teachers will be welcome.

18 As a teacher, I plan on doing what I've been

19 doing for the past seven years, and that's to do

20 my part to provide a high-quality education to

21 all my students no matter the building. I'm

22 good at what I do and I'm going to continue

23 being good at what I do whether I teach

24 Courtenay students, Stockton students, anyone.

1 Thank you.

2 MR. DE LONGEAUX: Thank you.

3 MR. CAWLEY: I would like to mention that

4 Alderman Kaplan has joined us.

5 MR. DE LONGEAUX: I would like to now call

6 Speaker No. 13, Corinna Chou, No. 14, Brad Reed,

7 and No. 15, Larren Tuggle.

8 MS. CHOU: Hi, I'm a Courtenay parent as

9 well, I have two students in the upper grades.

10 And a lot of us upper grade parents

11 heard quite a bit of commotion after the meeting

12 on Monday. I think many of us, pretty much,

13 thought it was done and were really invested in

14 getting a solid transition plan in place,

15 because we all know how important that is.

16 I have two high-performing students,

17 we've been with Courtenay since we walked in, it

18 wasn't a lottery school, I don't even know if it

19 is, at this point, in the upper grades.

20 One of the things that I find

21 disturbing and one of the other things I'd like

22 to point out, I, also, live in Uptown, I know

23 the Uptown community, inside and out, I know the

24 Stockton area, and I don't really like the

1 attacks that I've heard on the neighborhood at
2 all. Because it, also, makes me a bad parent.
3 Why am I choosing to live in Uptown? I choose
4 to live in Uptown for the diversity and I
5 definitely know that the neighborhood has
6 phenomenal potential with our new Alderman and,
7 quite frankly, with the community. It's an
8 extremely diverse and very integrated community.
9 One of the things that I think a lot of us upper
10 grade parents believe, and I don't speak for all
11 of Courtenay, I don't think anybody can speak
12 for all of Courtenay, and I'm vehemently against
13 people that do.
14 One other thing that I would like to
15 say and we've talked to Benes about, we adore
16 our teachers, we have phenomenal leadership, we
17 have phenomenal teachers, we have great parents,
18 and I'm sure Stockton has the same. When my
19 teachers and that I have faith in and my
20 leadership tells me that this is going to be
21 challenging but that we're -- the glass is half
22 full and we're going to make the best of it and
23 we're all going to work together to make this
24 new school a phenomenal school, then I have

1 faith in my -- in my teachers and my
2 administration, and in the parents that I've
3 worked with for so many years.
4 And I think a lot of us as parents have
5 said before, we would like to see the investment
6 from CPS, you know, we're willing to come in
7 during the summer, we want to build community,
8 we want to have training, we want to get this
9 moving forward, and all of these meetings are
10 just holding us up, at this point, to get our
11 transition class -- plan in place. I have kids
12 that will need to, potentially, go to a new
13 building and I don't want them to walk into a
14 hostile environment, I want them to walk into
15 the best possible place.
16 So, thank you, very much.
17 MR. DE LONGEAUX: Thank you.
18 MR. REED: Good evening, my name is
19 Brad Reed, I have a child at Courtenay.
20 And I appreciate the opportunity to
21 speak tonight, and I'm especially thankful for
22 all the Courtenay parents who wanted to be here
23 but couldn't and have entrusted their confidence
24 in myself as well as the other speakers tonight

1 to deliver a community message.

2 It's important to know and understand

3 that majority of us Courtenay parents are very

4 concerned over the new merger as well as whether

5 or not Courtenay will be able to maintain their

6 enrollment policy of 100 percent boundary

7 without neighborhood boundaries.

8 These concerns are not limited only to

9 a select few parents in a certain grade, rather,

10 they're representative of numerous parents of

11 Courtenay spread over all grades. We have

12 collected over 130 petition signatures which

13 represents greater than 50 percent of

14 currently -- of Courtenay enrollment.

15 As a parent -- as parents of Courtenay,

16 many of us are concerned over the following:

17 The actions of an -- of an initial scheduled

18 forum for the Courtenay School community to

19 discuss the impending school actions. There was

20 never an opportunity to do this. You presented

21 the entire plan tonight, three pages that

22 summarizes the plan with very little parent

23 input. In addition, this could have, also,

24 served as a venue to make other suggestions or

1 discuss options towards improving such as STEM
2 magnet or IB program.
3 Secondly, why Courtenay is the only
4 school involved in the citywide action proposals
5 that incorporates a change to enrollment policy.
6 The merge proposal suggests moving Courtenay --
7 moving the Courtenay model but changing this 100
8 percent lottery -- changing the 100 percent
9 enrollment to both lottery and neighborhood.
10 In summary, as parents of Courtenay,
11 many of us want the following: Remove Courtenay
12 from the proposed action due to the Courtenay
13 School not meeting the criteria to be closed
14 combined with the actions of a federal forum to
15 discuss this action.
16 For those that say Courtenay is not
17 closing, it's relocating, I would comment that
18 the changes in the proposal fundamentally change
19 the nature of the Courtenay School resulting in
20 school closure, not relocation.
21 It's unethical to call Courtenay School
22 the welcoming school when Courtenay will absorb
23 the Stockton building, the Stockton community,
24 and the neighborhood school enrollment model.

1 Secondly, if the merger must happen,
2 and it, you know, looks like it will, then
3 expand 100 percent of the Courtenay model to
4 include -- to include both current school
5 enrollments and maintain Courtenay's lottery
6 enrollment policy without neighborhood
7 boundaries.
8 This model is proven and effective.
9 Courtenay is most successful as a school of
10 neighborhoods, not a neighborhood school.
11 MR. CAWLEY: If somebody does have their
12 written comments, it would be great if you could
13 give them over to the court reporter to make
14 sure that we capture your comments in full.
15 MR. TUGGLE: Good evening, my name is
16 John Tuggle, proud father of Q, he is a
17 Courtenay student. Thank you for that,
18 appreciate it.
19 You know, I stayed up all night trying
20 to write semantic jujitsu and I didn't think of
21 it in time, so now I've lost that opportunity to
22 say, but I wanted to say that out loud because
23 it was great.
24 I am a teacher, 13 year teacher with

1 CPS, so I was going to write a speech, but like
2 many of my colleagues, I've been working on
3 grades for the last three days and trying to get
4 caught up and get everything in, so you're just
5 going to have to hear a little bit of rambling,
6 I apologize.
7 I want to talk, specifically, to this
8 idea of what I think is a timeline. So, my son,
9 Q, was accepted into Peirce, and then later we
10 heard from Courtenay, and -- and -- and we had
11 friends at Peirce, we looked at Peirce, but
12 Courtenay just really sounded like a special
13 place. So, like many of the parents, we chose
14 to go there.
15 So, we passed on the Peirce
16 opportunity, which, you know, we haven't
17 regretted a moment of, it's been a really
18 special kindergarten year for them. So, that
19 was in March, when they had lottery in December,
20 and as I understand, in March we made the
21 announcement then about this -- the -- the
22 schools being consolidated, and then we were
23 told that if we wanted to, we could fill out the
24 secondary lottery thing, which, great, we did

1 that, and what I noticed when I filled out the
2 second lottery chance, there's a lot of schools
3 missing from that now.
4 So, what I'm wondering is where's the
5 due process? I heard that used earlier tonight,
6 you know, criminals get due process, I'm
7 wondering if teachers, and students, and parents
8 get that same (Applause). There's no clapping,
9 you heard that now.
10 So, that's my big concern, I mean, you
11 know, is we love parent involvement and if a
12 teacher and school can have very well parent
13 involvement, I'm really excited that no matter
14 which side people are on, people are here and
15 fired up about this and I -- and I think it says
16 a lot about the students and the school.
17 You know, we've been promised, you
18 know, this opportunity to be sort of what
19 they're calling higher-functioning schools, but,
20 again, that -- I've heard that promise before,
21 it was under that, "No Child Left Behind," where
22 they said everybody could go and that didn't
23 really happen, so unless there's really a way
24 for that to happen, it's sort of like saying I'm

1 going to pass a law that says everybody has to
2 be happy, it's a little hard to enforce I think.
3 I just want to say very quickly in my
4 last 15 seconds, the notion of stability came
5 up, and like my colleague who's, also, a
6 teacher, I'm pretty good at what I do, I mean,
7 I -- you know, I'm a Golden Apple finalist, I'm
8 a Schwabb finalist, but, also, the school, and
9 I've been there 13 years, that has had five
10 different administrations in the last two years,
11 okay, five administrations in two years, we're,
12 also, (c) Grant recipients, and we're on the
13 third figuration of people running that. Let me
14 tell you, I can work 90 hours a week, and
15 sometimes I do, but given those sorts of moments
16 of chaos, it's pretty hard to do your job that
17 well.
18 So, I really -- if I'm saying anything,
19 it's a vote for stability. I know my times up,
20 but I thank you all for listening to us and I
21 appreciate it.
22 MR. DE LONGEAUX: Thank you.
23 Speaker No. 16, Lavera Lee, 17,
24 Anne Cuddy, and 18, Malisa Rakanovic.

1 MS. LEE: Hi, my name is Lavera Lee, and I'm
2 the current LSC Chair of Stockton School.
3 My biggest concern and it really hasn't
4 been answered about special needs children, you
5 know, we have student enrollment at Stockton
6 those -- and I know some of the parents here who
7 have special needs children that are really
8 concerned about that.
9 And I wanted to say, too, that, first
10 of all, I am against any school closings in
11 Chicago (Applause), I just want to make that
12 clear, but since we have to come together, I've
13 listened to people say neighborhood school like
14 they were spitting. Stockton is a wonderful
15 school. I've sent all my children to Stockton
16 School. And, as a matter of fact, one of my --
17 my oldest son went to Stockton School and, at
18 this time, he's an engineer. So, y'all say
19 Stockton like we don't create greatness.
20 You know, it's not the -- the area,
21 it's the parents, it's what you do with your
22 children, you know, and all we want is to -- if
23 this is going to happen, we want this to be a
24 smooth as possible for the kids. We have to

1 think about the kids. All of this politics, the
2 kids are getting lost in it. So, we have to
3 think about their feelings, too, and make this
4 transition just as smooth as possible. Thank
5 you.
6 MR. DE LONGEAUX: Thank you.
7 Speaker 17, Anne Cuddy's not here, so
8 Speaker No. 18, Malisa Rakanovic.
9 MS. RAKANOVIC: My name is Malisa Rakanovic,
10 and I'm D's mom.
11 D is a highly functioning kid diagnosed
12 with autism when he was 2-and-a-half. So, he
13 missed the boat with Early Intervention, and I
14 walked into our neighborhood school, but the
15 case manager told me he was only 2-and-a-half,
16 he wasn't coming in with Early Intervention or
17 through Early Intervention, so we had to
18 initiate an IEP.
19 The IEP was finalized December 2012,
20 and still he didn't get accepted because they
21 were full. February 2013, just a few months
22 ago, D was placed at Courtenay. When his IEP
23 was drawn, he was uttering maybe two to
24 three words in phrases, but now he's talking,

1 he's telling me about his day.

2 And to echo the last speaker, I'm

3 against school closing, period (Applause). I

4 grew up in Singapore, I say invest in education,

5 I really do not agree with your proposal because

6 of how it was worded. Stockton is not being

7 closed, Courtenay is. Regardless of anything,

8 you should be proposing to expand the resources

9 and funding that's available to higher

10 performing schools to Stockton instead of all

11 these merges, deficit, figure it out. It's not

12 for the kids' benefits that you're doing this

13 and it's really unfair.

14 I have a younger daughter who's

15 2-and-a-half and she's receiving services

16 through Early Intervention. If the merger goes

17 through, so be it, but my younger daughter would

18 probably be placed somewhere else because you're

19 converting Courtenay to a neighborhood school.

20 And with the bad taste that my last neighborhood

21 left with me, I don't agree on converting

22 Courtenay to a neighborhood school.

23 If you say that Courtenay's a welcoming

24 school, then move Courtenay along with all of

1 its policies, procedures, benefits, whatever,
2 into Stockton and make sure you have the
3 resources to serve the children, because even if
4 Stockton is underutilized, you're bringing all
5 of Courtenay students into the building.
6 So, that's all I have to say.
7 MR. DE LONGEAUX: Thank you.
8 Now calling Speaker No. 19,
9 Keti Tuthorn, 20, Kerry Martin, and 21,
10 Christine Clark.
11 MS. TUTHORN: I don't think that I'm really
12 going to read off of it. Hello, again, I just
13 want to clear up some misconceptions.
14 When the parents come here and they
15 talk about Courtenay's lottery status, I think
16 what we're most concerned about is being
17 confined to a neighborhood. Our children may go
18 over there, but if you turn it into a
19 neighborhood school and then allow people and
20 other children in afterwards, you're denying
21 children all around Chicago an opportunity for a
22 great school.
23 And I have a son and I was planning on
24 my son on going to Courtenay. Now if Courtenay

1 moves to Stockton and you have neighborhood
2 preference, he's probably not going to come in.
3 I don't want to separate my daughter and my son
4 and send them to two different schools, I just
5 think that's not fair.
6 So, when we talk about lottery status,
7 that is, indeed, what we're talking about, we're
8 talking about equal opportunity for all the
9 children to be able to attend a great school.
10 Everyone's concerned about classroom
11 sizes. We're talking about two schools who
12 pride themselves by using discretionary funds so
13 that they can keep their classroom sizes down.
14 Both Stockton and Courtenay have a commitment to
15 small classroom sizes. We have special ed
16 populations which, you know, can Stockton with a
17 33 percent special ed and a 30 percent special
18 ed population, can we accommodate all these
19 people or are we going to end up marginalizing
20 them. You're already marginalizing these two,
21 we don't really need to traumatize them all over
22 again.
23 Also, I wanted to talk about what about
24 alternatives. Courtenay wasn't on that initial

1 list of school impacts for a reason. We weren't
2 on there, we were thrown on there last minute.
3 I understand we're a small school, I, also,
4 understand that, you know, fundings probably not
5 going to go to small schools any longer, we have
6 to consolidate because we have this deficit, I
7 understand money, I'm not stupid. But what you
8 can, also, look at is doing this slowly and over
9 time, not going -- throwing a big Hail Mary pass
10 and, hopefully, everything's going to fall into
11 place (Applause) because, quite frankly, I don't
12 think that's going to happen.
13 So, what about an alternative, what
14 about expanding Courtenay. You know, if you're
15 going to be closing down schools, guess what,
16 there's going to be a lot of empty buildings
17 around. How about we let Courtenay into one of
18 those empty buildings and we let our 200
19 students on our wait list come in and utilize
20 the rest of the space. How about Disney II is
21 now getting funding to be expanded from Pre-K to
22 6 to 6 to 12, how come Disney's getting this
23 money, how about you send that money to
24 Courtenay, we can use that money (Applause). I

1 bet you if Courtenay opened a Pre-K to 12,
2 there'd be a list out the door.
3 And the last thing is, you're not
4 talking about an attrition rate, when you
5 takeaway a school that is this powerful,
6 students are going to go to private schools,
7 they're going to go to the suburbs, your ward
8 loses money, your district loses money, the City
9 of Chicago loses money. Thank you.
10 MR. DE LONGEAUX: Thank you.
11 Can you, please, state your name and
12 your affiliation to the school.
13 MS. MARTIN: Sure. I'm really here to talk
14 to the people here. My name is Kerry Martin, I
15 am a teacher at Courtenay Language Arts Center,
16 I am a special ed teacher at Courtenay Language
17 Arts Center, and have been for 20 years.
18 I've been teaching at Courtenay since
19 1993, and, at that time, we were beginning to
20 build a -- bring in the general ed community
21 into Courtenay because we had previously been
22 100 percent special ed. We have always been a
23 diverse community, both academically and
24 culturally. We welcomed anyone who walked in

1 the doors. After all, we're named after a woman
2 who was at the forefront for free and
3 appropriate education for all (Applause).
4 I personally welcome the opportunity to
5 work with the Stockton community. I see this as
6 a chance to grow professionally. I develop -- I
7 can develop a stronger professional community to
8 increase my collaboration skills and to stretch
9 my wings a little bit.
10 I see this as a great opportunity for
11 our kids and our families as well. They'll have
12 more space to grow, access to a better facility,
13 and a larger community of friends.
14 Thank you. That's why I turned that
15 way.
16 I look at it -- I look at it like this,
17 Stockton needs kids and Courtenay has some.
18 Courtenay needs a building and Stockton has a
19 beautiful one. Let's make this work. Let's
20 make it work. I was on the picket line with
21 you. I don't want to see any schools close. I
22 don't want parents and children to be stressed
23 out. Both Stockton and Courtenay communities
24 will survive. Let's make this the best darn

1 school in the city (Applause).

2 Like you, I still have questions.

3 After 20 years, a superior rating, National

4 Board Certification, and a master's degree-plus,

5 I still don't have the job security I'm looking

6 for. But I find comfort in knowing that if I

7 keep my personal high professional expectations

8 for myself, I'll be okay. And so will you.

9 Thanks.

10 MR. DE LONGEAUX: Thank you.

11 MS. CLARK: Hi, my name is Christine Clark, I

12 have a daughter at Courtenay.

13 And when this does become the best

14 school in the city, which it possibly can be, my

15 3-year-old son may not get in because we do not

16 live in this -- in the neighborhood boundaries.

17 Our neighborhood's school's not an option. Last

18 year the principal was removed twice for two

19 separate offenses. I don't know what I'm going

20 to do with him. But I'm here to read on behalf

21 of another parent who can't be here today,

22 Amelia Jacoby.

23 "This letter is my effort as a parent

24 to voice my opinion regarding the proposal to

1 move Courtenay students to Stockton Elementary.
2 I, as a parent of two sons currently attending
3 Courtenay, am deeply saddened and disappointed.
4 There have been many sacrifices that as parents
5 both my husband and I have chosen to make for
6 the betterment of our sons' education.
7 About a year ago, we had a change of
8 residency due to our home foreclosure and the
9 distance has forced our children to have to
10 depend on public transportation to get to school
11 in the mornings. We have agreed to do this
12 because we love Courtenay. Our children have
13 been performing very well academically which
14 says quite a bit about the learning environment
15 they are in.
16 The small school and class sizes do
17 indeed make a difference in the attention and
18 comfort they feel from the faculty and staff. A
19 change of this capacity can have a negative
20 impact on a child's learning. I have not heard
21 this topic brought up by the Board of Ed. There
22 is a correlation between a child's performance
23 and their emotional comfort to an environment.
24 Stockton is an underperforming and

1 underutilized school which is an issue unrelated
2 to Courtenay. This should be solved in a manner
3 that both benefit Stockton's current performance
4 and the socioeconomic issues of the students
5 that attend Stockton. What a disservice to
6 those parents and kids. Bypassing the issue and
7 trying to close a school not meeting standards
8 set by the Chicago Board of Ed is not a
9 resolution but rather a denial of the problem.
10 My children's safety is a large
11 question and will force me to reevaluate their
12 continued attendance and I'm sure many other
13 families of Courtenay. When CPS Chief
14 Barbara Byrd-Bennett said about no child will be
15 transferred to a school with a lower scholastic
16 ranking than the one he or she is currently
17 attending is clearly not accurate. Millions of
18 taxpayers dollars were spend in the renovation
19 of Stockton, did no one care at the time that
20 the school was only 41 percent occupied?
21 Children have to stop being punished for the
22 irresponsible lack of future planning displayed
23 by the Board of education. It's a disgrace and
24 I'm sure none of the children of the Chicago

1 Board of Ed staff are being affected.

2 The city has failed us many times

3 throughout the years and I'm less proud of being

4 a Chicagoan now, more than ever. We have

5 seriously considered relocating to the suburbs

6 where all children attend a great school and

7 where taxpayer's dollars are benefitting the

8 school system.

9 The city is broken and no one cares to

10 fix it, as parents we ask that you reconsider

11 closely the affects this decision will play in

12 the lives of the children of Chicago.

13 Thank you for hearing my voice."

14 Now back to me, Christine Clark, now

15 that I got that finished. We don't have other

16 options, we can't just walk into a school. We

17 applied to neighborhood schools, we have no

18 problem with neighborhood schools, just not our

19 neighborhood school. Our waiting list numbers

20 were in the 200s to 800s. This was the only

21 school we received a spot. We had no other

22 choice. There are no other choices for us. If

23 our neighborhood schools are terrible, failing,

24 and, essentially, dangerous places, we have

1 nowhere else to go and my son may not have a
2 place to go when Courtenay becomes this
3 wonderful model school.
4 Thank you.
5 MR. DE LONGEAUX: Thank you.
6 Now calling SP, Romana Puente, and
7 Tamiye Meehan.
8 STUDENT SP: Hello, my name is SP, I'm a
9 student from Courtenay Language Arts Center.
10 At first, I was afraid of moving to
11 Stockton because I didn't know anyone and didn't
12 know if they were going to be nice to me.
13 I went to visit Stockton, I felt okay,
14 I thought the school was really big, I saw the
15 gym, the music room, the auditorium, and all the
16 students' lockers.
17 I met some of the kids when they were
18 playing basketball. They were really nice, they
19 let me shoot some hoops with them. The music
20 teacher let me play on her xylophone. She was
21 really friendly and nice. She even let me go on
22 the stage in the -- in the auditorium.
23 I met -- I'm excited to move to
24 Stockton because Courtenay doesn't have all of

1 these things -- things and I'm so excited to
2 make new friends and meet new teachers.
3 MR. DE LONGEAUX: Thank you.
4 MS. PUENTE: I know people are upset, this
5 school -- these schools are closing, those
6 schools are moving. In a perfect world, there'd
7 be money enough to keep all schools open.
8 Unfortunately, it's not a perfect world.
9 I think we are kind of losing sight of
10 what matters most and those are our students.
11 We as parents need to work together with our
12 teachers to make this transition as -- as easy
13 as possible for our kids.
14 I've been in Stockton, it's an amazing
15 school. Not just the building, but, also, the
16 teachers, staff, and the parents that I've had
17 the pleasure to meet. If we have 100 percent
18 faith in our teachers and our students, which I
19 do, all our students, all our teachers, I'm
20 sorry, we have nothing to worry about.
21 The schools separately are amazing,
22 imagine what we can do if we work together. As
23 my friend Cassie Vickas said, it's not the
24 building that makes the school, it's us that

1 makes the school.

2 Thank you.

3 MR. DE LONGEAUX: Thank you.

4 MS. MEEHAN: Hello, my name is Tamiye Meehan,

5 I have lived on Dover Street for the last almost

6 50 years now, 50 years come July.

7 I've watched Stockton go from a small

8 school to a school that was loaded with, what do

9 you call those extracurricular-type buildings,

10 so the students can be locked in the -- I'm

11 sorry, what's the word for that?

12 MR. CAWLEY: Mobile.

13 MS. MEEHAN: Mobile units, okay. Well, the

14 whole yard was covered with mobile units.

15 Mobile units are gone, the school's been

16 renovated.

17 Dover Street neighbors, which I've been

18 a part of for the last 50 years, is welcoming

19 the changes that are coming. I've been

20 listening to the Courtenay teachers here

21 tonight. I'm impressed. Stockton -- Stockton

22 will benefit from the -- from the combination,

23 and I'm sure Courtenay will, too.

24 For the last several months, the Dover

1 Street neighbors have been working with the
2 library at Stockton. As a former class
3 president of the Illinois Library Association, I
4 can tell you I'm impressed with the quality of
5 materials in that library. I had not expected
6 it. My only concern now is that this library be
7 used in the way it needs to be used. There are
8 not sufficient staff, at this point in time, to
9 keep the library open and to make a -- make a
10 center for reading for the children of Stockton
11 or of Courtenay. So, I'm hoping you're going to
12 bring in a full fledged all-accredited librarian
13 as well as a couple aids. But I can tell you
14 that the Dover Street neighbors will be there to
15 help in any way we can.
16 One other thing I'd like to address,
17 there seems to be some concern about the
18 neighborhood. This is a neighborhood where the
19 condos are going for $300,000 to $400,000, this
20 is not a neighborhood where you need to worry
21 about who's walking down the street. What I --
22 what you might have to worry about is the
23 coyotes, we do have those, and they're not
24 people, they are strictly animals, and they're

1 there between 9:30 and 11:30 at night.

2 Other than that, the neighborhood has

3 come -- come a long way in the 50 years I've

4 been here. I'm looking forward to retire when I

5 retire and staying in my community, and we

6 welcome the Courtenay group and I'm looking

7 forward to what they can do for the community

8 because I've watched too many neighbors move

9 out, move out to the suburbs when it came time

10 to put their children in school.

11 I really want a school that we can

12 promote, a school that we can market, that we

13 can say is good for our neighborhood, and I

14 think that Courtenay grouped with the Stockton

15 group can do that. Thank you.

16 MR. DE LONGEAUX: Thank you.

17 Now calling Speaker No. 25,

18 Patrick Lyman, and Speaker No. 26, Brooke Gard.

19 MR. LYMAN: Hello, my name's Patrick Lyman, I

20 have a daughter at Courtenay.

21 And she had started out in a

22 neighborhood school and it was fine. However,

23 we got the opportunity, we got the call from

24 Courtenay to visit the school and immediately

1 upon touring the school we saw that it was a
2 special place.
3 I didn't want to have to tell my
4 daughter that we were moving her. Had to take
5 her out for frozen yogurt, there were tears in
6 the frozen yogurt store, she did not want to
7 move, but within two days being at Courtenay,
8 there was such a transformation, she was
9 engaged, she was happy, she didn't want to admit
10 that we were right but she said, you know, "I'm
11 much happier here."
12 So, my main point, and I think it's
13 been great to hear everybody else's stories, is
14 that right now, at this moment in time,
15 Courtenay is a very special place, and we would
16 all like to be hopeful about the change, but
17 it's hard not to be cynical the way things have
18 happened, the way the announcement was made at
19 the last minute, the way that Courtenay doesn't
20 meet the criteria to be closed. You can say
21 it's not closing, but it's like putting the
22 Cardinals name on the scoreboard at Wrigley
23 Field, it's really not fooling anybody. So, my
24 request is to maintain the lottery program, to

1 try to maintain what is special about Courtenay.
2 And, also, I have young twins who will
3 be effected, they won't be able to attend
4 Courtenay with their sister should we choose to
5 continue.
6 So, I, you know -- people here tonight
7 have been so articulate and so impassioned, my
8 hope is that we're at a crossroads, we're not at
9 a one-way street, and, please, just listen to
10 everybody and do take your time to consider this
11 and try to maintain what does make Courtenay
12 special. Thank you.
13 MR. DE LONGEAUX: Thank you.
14 MS. GARD: Hello, I am Brooke Gard, I have a
15 student at Courtenay, but I'm here to read a
16 letter on behalf of a parent that could not be
17 here.
18 MR. DE LONGEAUX: Speak up.
19 MS. GARD: Better?
20 MR. DE LONGEAUX: Yeah.
21 MS. GARD: "I am seriously concerned about
22 the special education children, 30 percent
23 Stockton, 30 percent Courtenay, how will this
24 affect them? Special ed kids need structure and

1 consistency.

2 One special ed teacher explained to me,

3 that when administration said they were going to

4 move special ed children from one room to

5 another, the special ed teachers had to prepare

6 the students all summer long for this

7 transition. And that was within the same

8 building and with the same teachers and

9 students. Can you imagine moving these same

10 children to a different building, different

11 classroom, potentially changing their teacher,

12 and adding new pupils to the mix? Then consider

13 these children in the hallway with 800-plus

14 children and the additional hallway chaos due to

15 additional students.

16 Someone told me, these kids are not

17 your problem. Sorry, but I cannot do that. I

18 can't turn the blind eye. I am a humanitarian.

19 We all live in the interconnected web

20 of life. Someone said these kids are being

21 bused in, and when Courtenay becomes a

22 neighborhood school, they will have to go back

23 to their neighborhood schools. Obviously, their

24 parents did not think the neighborhood school

1 had the resources of special ed qualified
2 teachers for their children in their
3 neighborhood school.
4 Maybe they were forced out of their
5 neighborhood school, or the neighborhood school
6 simply said they could not help the special ed
7 child because they did not have resources. What
8 better place for special ed kids then an
9 administration and teachers who are specially
10 trained and understand their needs, like
11 Courtenay. And a place where the teachers care
12 so much that the teacher got a grant to cover a
13 $65,000 autism sensory room, Stockton.
14 The special ed children should not be
15 forced back into their neighborhood schools
16 because, clearly, the neighborhood school does
17 not know how to care for them or how to teach
18 them, otherwise, the parents would have been
19 busing their children to Courtenay and
20 Stockton."
21 Just for myself, I want to just be
22 clear that I think that Stockton has a lot to
23 offer. I, also, think Courtenay has a lot to
24 offer. My beef is not with putting these two

1 schools together, it's more about how the
2 process happened and how the parents were
3 informed and the feeling that we made a choice
4 to attend this school and for a lot of people it
5 seems like that choice is being taken away.
6 Thank you.
7 MR. DE LONGEAUX: I'm now calling Speaker
8 No. 27, Taryn Kurth, and 29, Jesus Gonzalez.
9 MS. KURTH: Hi, my name is Taryn Kurth, and
10 I'm a parent of a 1st grader and Courtenay.
11 I support the relocation proposal. We
12 chose Courtenay because of the intimate
13 atmosphere and the exceptional academics and
14 we've not been disappointed. We have a special
15 faculty and administration who are dedicated to
16 our students and academic rigger and I'm excited
17 to be able to bring that to more students at a
18 larger facility with amenities that weren't
19 possible at our current building. I'm excited
20 to see my daughter and her classmates perform in
21 an auditorium on a real stage, to gain hands-on
22 experience in a proper science lab, and
23 participate in sports in a gymnasium instead of
24 a partitioned cafeteria.

1 I do not think my child's education
2 will be deluded because it will happen in a
3 different building, if anything, it will be
4 enhanced by the additional resources that will
5 be available. A large part of the Courtenay
6 culture is the value we place on small class
7 sizes and inclusion and respect for all
8 students.
9 After meeting with some of the teachers
10 and parents at Stockton, I believe it is
11 something that Courtenay and Stockton share in
12 common. Historically, our students have been
13 admitted not through selected enrollment but
14 blindly regardless of ability and our teachers
15 are exceptional at assessing the strengths and
16 weaknesses of the individual student and find to
17 create ways to keep the students engaged.
18 I'm aware that Stockton's being closed
19 as an underutilized school and not an
20 underperforming school. I've met some of their
21 talented and passionate teachers as well and
22 personally I'd hope that remaining of them be
23 able to remain part of the Courtenay community.
24 Thank you.

1 MR. GONZALEZ: Hello, everyone, my name is
2 Jesus Gonzalez, I spoke in the -- in the last
3 meeting.
4 I have the opportunity to meet people
5 from Courtenay first and some of the
6 administration, very nice people, but -- well, I
7 got the opportunity to meet people from
8 Courtenay, I heard both sides, pro and con. One
9 of the things I am against it is they call that
10 welcoming school, merger, really it's not for
11 Stockton, it's really takeover for Stockton
12 building.
13 I spoke with several parents of
14 Stockton, which the ones I spoke with, they are
15 all against it, most of them my people, Latino
16 community, that's the one I spoke with the most.
17 They said that neighborhood schools definitely
18 sound like they speak very well about it, but I
19 have a stepdaughter who's in Lake View High
20 School and all her classes has very good
21 teachers, so I don't see what they see negative
22 in neighborhood school.
23 My son is a small Stockton -- sorry,
24 CPC, I travel from Logan Square to bring my son

1 to CPC because Stockton is a good school, my
2 stepson was there, my stepdaughter was there,
3 several of friends was there. We took college,
4 very good colleges, and nothing wrong with the
5 neighborhood schools.
6 And I believe if a merger -- takeover,
7 I'm sorry, it will happen, I think that our
8 administration from both the schools has to be
9 more open to parents and just to hear the
10 parents or our concerns. Whatever they happens,
11 I'm still against it, but I want the best for my
12 child.
13 MR. DE LONGEAUX: Thank you.
14 Speaker No. 30, Derek Bridges,
15 Pete Winninger, and Maria Galicia. Can you,
16 please, state your affiliation with the school.
17 MR. BRIDGES: My name is Derek Bridges, I'm a
18 teacher at Stockton School, I teach 5th grade, I
19 actually spoke last Monday as well.
20 And, once again, I wasn't planning on
21 speaking, but then I got here and couldn't help
22 myself. I've heard a lot of people say a lot of
23 things about Courtenay students and Courtenay
24 staff, and from everything I can tell, Courtenay

1 is an excellent outstanding school. I haven't
2 heard a lot of people talk about what Stockton
3 students get out of this, what are the benefits
4 for the children that I see every day.
5 I'm looking at this list, it says, "As
6 a welcoming school, Courtenay will offer a Level
7 2 school." Stockton was a Level 2 school last
8 year, we lost -- it was less than 1 percentage
9 point of attendance that dropped us down to a
10 Level 3. We'll be Level 2 again next year,
11 anyway, so they're not gaining anything there.
12 Pre-K program, already got it.
13 School safety plan to provide smooth
14 and safe transitions, our kids are staying in
15 the same neighborhood, don't need it.
16 I'm looking here, air-conditioning in
17 every classroom, they've got it.
18 Library in every school. Well, if they
19 would fund our librarian again, we have a great
20 library.
21 Newer upgraded technology support, we
22 already have two high, well-functioning computer
23 labs.
24 IPads for all students in grades 3

1 through 8. Well, Barbara Byrd-Bennett has been
2 in several School Districts in the last few
3 years of time, I've been at Stockton for three
4 years, we've had five CEOs, so I don't take
5 those promises too seriously (Applause), and
6 we'll be stuck with another CEO that makes
7 different promises and says, "Oh, well, I didn't
8 promise that, someone else did." So, I'm not
9 really holding my breath on that one and,
10 honestly, my kids have a lot bigger concern than
11 an iPad.
12 Improved ADA accessibility, we're
13 ADA-compliant.
14 Upgraded school interiors with fresh
15 paint, that's exciting, my kids will be really
16 excited about that.
17 I'm, also, looking at the situation
18 that we're at where both schools are without a
19 principal, we're looking at a principal
20 selection process. Stockton has almost twice as
21 many students as Courtenay, yet Courtenay's LSC
22 is the one choosing the new principal. There is
23 a joint LSC meeting where we were assured by
24 their LSC that they would represent our parents

1 and staff. At the same time, I've heard their
2 LSC say there were some parents from their own
3 school that they didn't agree with and they
4 weren't going to listen to which makes me
5 question how well they're going to listen to our
6 parents.
7 I'm hearing lots of promises, I'm not
8 seeing a single benefit in this to Stockton
9 students. I'm seeing new staff, excellent
10 staff, don't get me wrong, but new staff that
11 are all strangers to them, bigger class sizes,
12 lots of transition and upheaval and no benefits
13 at all. I've not found a single benefit on this
14 piece of page for these students, 475 of them.
15 I want to know what they're going to get. And I
16 don't want these things as answers because I've
17 told you why those aren't them. Thank you.
18 (Applause) Oh, and one more thing, if
19 this is about finances and stuff, we didn't
20 create the financial mess, someone else did. If
21 you can't figure out the finances, then maybe we
22 should find somebody who's a little better with
23 finances to run the district.
24 MS. GALICIA: Good evening, my name is

1 Maria Galicia. I came to tell you about my son
2 and what happened with my son.
3 I live a block away from a school that
4 only went up to 6th grade, and there was another
5 school, a middle school where they had 7th and
6 8th grade and I moved him there. There was a
7 child in that school who threatened my son with
8 a knife. I took him out of there immediately
9 and I moved him into Courtenay.
10 He had a lot of trauma, he had a lot of
11 depression from what he had gone through in that
12 school. And I didn't have any doubts about
13 moving another son who was doing very well, high
14 performance with all A's and B's at the other
15 school and I took him -- I took both of them out
16 and moved them to Courtenay. And, then, my son
17 who was depressed from what had happened to him
18 improved quickly, they helped him with his
19 depression, and now he comes to the school and
20 he gets all A's and B's.
21 I'd like the school to remain in the
22 same site because now my younger kid is going to
23 go up to 7th grade and I'm afraid that my
24 younger son that when he comes to the new school

1 building that the other students in Stockton are
2 going to see the kids coming from Courtenay as,
3 like, they're invading and they're going to do
4 the same thing to my son.
5 And that I, also, think that the other
6 thing is we're looked at as intruders by the
7 Mayor. There was someone here last time who
8 said that they think that they felt safer
9 because the Mayor lives there. I think it's the
10 other way around, I think it would be that the
11 Mayor looks at us as intruders, but I think it
12 would be easier for him to move out of the way
13 than for him to close down my schools
14 (Applause).
15 Thank you.
16 MR. DE LONGEAUX: We have Speaker 31,
17 Pete Winninger.
18 MR. WINNINGER: My name's Pete Winninger, my
19 son attends Courtenay, he's currently in the 4th
20 grade.
21 I just want to right now publicly say
22 thank you, guys, because Courtenay has been an
23 amazing community and such a good fit for my --
24 my son. But aside from that, I'm sure Stockton

1 has been a very good home for their children as
2 well, and what I'm more upset about with this
3 entire process is the fact that the CPS, once
4 again, has not given us the time to integrate
5 our communities together so that I talked with
6 some Stockton student -- not students, some
7 Stockton parents earlier, I hear your concerns,
8 a lot of them are very similar to our concerns,
9 and if we could, actually, meet with them in an
10 orderly fashion, I think a lot of our
11 reservations would be lifted.
12 I haven't really seen a vehicle for
13 this to happen, has there been? I mean, correct
14 me if I'm wrong, but your jobs are funded by my
15 tax money and my real estate. So, I think that
16 we should have an equal chance.
17 Now, if the writing is on the wall and
18 this has to happen, I think all of us want it to
19 happen as positively as possible, I don't think
20 anyone wants a riot about this, but I think we
21 need to be able to be given the opportunity to
22 merge our schools because, obviously, the
23 Stockton people really care about their schools,
24 and I know damn well that the Courtenay people

1 care about our school. Let us do this in a way
2 that makes sense as humans, not as corporate
3 interests we're trying to, like, jack up prices
4 somewhere, I don't know, there's a lot of stuff
5 going around as far as why this is happening.
6 I don't really care about transparency
7 because I don't expect to get it, maybe that's,
8 like, my Jewish and Native American upbringing,
9 but I, also, understand though that these things
10 happen and sometimes you just have to go with
11 it, maybe that's my German upbringing.
12 This is the thing, I think we can make
13 this happen, I think this can be good for
14 everyone, but we've got to give a chance to this
15 community to do it, because we're invested in
16 it, we've got the most important investment in
17 our lives, our kids. Please, let us do that.
18 MR. DE LONGEAUX: I'm now calling
19 Melanie Bienemann.
20 MS. BIENEMANN: That's Melanie Bienemann to
21 you. I was in 4H, and every time I got an award
22 it was Melanie Bienemann, so try and get it
23 right next time.
24 MR. DE LONGEAUX: I'll do my best.

1 MS. BIENEMANN: So, all I want to say is I'm
2 not an elitist and I'm not against the Stockton
3 people, I've read their story, it's an amazing
4 story, and we just all want what's best for our
5 kids. Everybody here wants small class sizes,
6 everybody keeps telling us, I want 25 in a
7 class, I don't want 30. And I know CPS model is
8 25 to 30 and I don't see anything else
9 happening. The only reason that Courtenay has
10 had smaller class sizes is because they
11 literally couldn't fit anymore kids in the room.
12 So, all I can say to you is, we'll just
13 have to keep using discretionary funds, but then
14 I have a concern that CPS will still try to shut
15 us down because we've used our discretionary
16 funds and they want us to have 28 to 30 and
17 we're never going to have those numbers and have
18 successful schools.
19 MR. DE LONGEAUX: Thank you.
20 This is our last speaker on the list.
21 If anyone wants to speak again, please,
22 come and signup. So, I'm calling you,
23 Symantha Lancaster.
24 MS. LANCASTER: Hello, everybody. I'm sorry

1 if you notice me doing a little outburst,
2 because as a parent of a special child and as an
3 employee for Chicago Public Schools for 23
4 years, I have a little idea. No, I'm not a
5 teacher, I'm career service, but I still work
6 with kids alongside my teachers.
7 I'm really here to discuss the problem
8 of some -- I was listening to people, some
9 people say, yes, they want, some people said,
10 no, they don't, that's not my big issue. I'm
11 talking more about as a person who witnessed a
12 shooting in front of the CPC door, it was a
13 person who was not even part of the gang, bring
14 their child into CPC at Stockton and they shot
15 them right out in front of the door of the
16 school when I was working there during broad
17 daylight.
18 So, the person who said there's no
19 problems with gangs, that's not all true. Yes,
20 it's much better than what it's been
21 20-something years ago, but there's still some
22 problems in there. Another time somebody else
23 got hurt. So -- and I know it's all over, it's
24 not just Stockton, it's everywhere, but I'm more

1 concerned about kids going to school not in
2 their neighborhood coming down the street unless
3 they got parents going there with them and I'm
4 quite sure a lot of parents, either they're in
5 school, or they're working, or they just don't
6 have time every single day unless they're part
7 of the school, that's my biggest concern about
8 kids coming to school wondering down the street.
9 I know Courtenay is, like, miles away
10 from me, because I'm on the bus, I don't drive,
11 so it's a good ways from me, and I'm quite sure
12 Courtenay is a beautiful school, Ms. Tammie, I
13 don't remember her last name, she's been
14 remarried, she's a sweet person and me and her
15 worked together when she was at Stockton, but,
16 like I said, my main thing is the kids come into
17 areas and, like I say, it may be Courtenay, I
18 don't know, it may be Stockton, but I'm
19 concerned about the gangs and what's happening
20 in the schools and if you're going to take a
21 child out of their neighborhood and have them go
22 into a neighborhood that they, basically, don't
23 always go into, have you figured -- I know some
24 people say, well, we got that all taken care of,

1 we got security, we got police, but it's not
2 going to always be all the time, that's my main
3 concern. So, that's -- that's why I'm saying
4 something about that.
5 MR. DE LONGEAUX: Thank you.
6 I'm calling Keti Tuthorn.
7 MS. TUTHORN: You guys are going to get sick
8 of seeing me, I know. I just can't help it, my
9 mother raised very vocal children.
10 Okay. So, I'm glad the whole safety
11 issue was brought up, because I got to tell you
12 something when I keep hearing about this safety
13 plan that's in effect, it doesn't make me feel
14 better, it actually makes me feel worse.
15 Because I'm going, what is my child going to be
16 walking through that we need this huge safety
17 plan in effect, because there is no safety plan
18 when my daughter goes to Courtenay right now.
19 So, that is a big change. And as the lady just
20 said before me, we can have police patrolling
21 there, but we all know they can only do so much.
22 You cannot stop a bullet flying across the
23 street. So, yeah, safety is a concern.
24 My other concern is, like I said

1 before, why can't we expand Courtenay, why can't
2 we put Courtenay in a safe neighborhood and then
3 people from Stockton if they choose to can spend
4 their kids to Courtenay because it's citywide,
5 people from all across Chicago can send their
6 kids to Courtenay because Courtenay is citywide.
7 I'm not talking about, oh, I don't want my kid
8 to go to Stockton, no, what I'm talking about is
9 an option for all of Chicago that's being
10 threatened to being taken away, we need citywide
11 schools, we need citywide schools as an
12 alternative to private schools and an
13 alternative to moving out to the suburbs and we
14 don't really have them right now.
15 So, for the City of Chicago's sake, why
16 don't we have schools like Courtenay in a safe
17 neighborhood. It can be larger, but keep the
18 class sizes just a little bit on the smaller
19 side. Hey, if you want 25 to 30, let's keep it
20 at 25, 26, you know, we can compromise, we can
21 meet people halfway, it shouldn't always be all
22 or nothing.
23 I think that right now, this is just
24 happening way too fast and I know parents from

1 both Stockton and Courtenay feel that way, it's
2 just too fast, it's too much at once. And if
3 I'm feeling overwhelmed, I know my daughter's
4 going to feel overwhelmed, I know your children
5 are going to feel overwhelmed, and that's just
6 not fair. So, how about we just take a step
7 back right now. Why does this all have to
8 happen at once.
9 And by the way, when we close all these
10 schools down, how much of that deficit is it
11 really going to take care of at once, it's what,
12 6 percent I think (Applause). I want to know
13 what the plan is for the other 94 percent. What
14 is the plan, the long-term goal to take care of
15 the other 94 percent of what this deficit is.
16 Because if you're going to be closing my school
17 down, I want to make sure that we've got a
18 long-term plan in effect. That's just my --
19 thank you.
20 MR. DE LONGEAUX: Thank you.
21 Malisa Rakanovic.
22 MS. RAKANOVIC: Sorry, now I have another
23 child.
24 I just want to reiterate that earlier

1 when I said Courtenay versus neighborhood, I
2 have nothing against neighborhood, I just have
3 reservations possibly very, very possibly
4 returning to Kilmer, my neighborhood school
5 right now. Because I visited the school, I
6 don't like the administration.
7 And somebody said that Disney II was
8 getting funding. Why is Courtenay being closed?
9 Why can't that funding be, you know, for
10 expansion be given to a school you're
11 considering for closure?
12 So, I just wanted to redirect, it's not
13 the neighborhood school issue. When I hear
14 neighborhood, I think boundaries.
15 So, I brought D because she -- if this
16 goes through, she won't be attending the same
17 school as her brother, and that's very unfair
18 for us. Because we can't just pick ourselves up
19 and what we're really considering is to move out
20 to the suburbs and I know many families that
21 thinking of that option, too.
22 So, I -- I really don't know, it's
23 really complicated but I think as the Stockton
24 teacher said, there's no benefit to them, you're

1 just renaming Stockton Courtenay and there's
2 going to be such dire impacts on the communities
3 on the whole, Courtenay will -- will not be
4 welcoming -- Courtenay will not be welcomed by
5 Stockton. So, students -- this will change, I
6 don't think you'll see the school retaining the
7 performance that -- that Courtenay has shown
8 through the years.
9 So, I don't know. I don't agree to
10 this school merger, I still don't.
11 MR. DE LONGEAUX: Claudia Pesenti.
12 MS. PESENTI: Hello, I'm still
13 Claudia Pesenti, and I'm still a teacher at
14 Stockton School until June 30th when Stockton
15 will cease to exist and as the Board person told
16 me.
17 And I was in the Stockton School
18 library for six years until Derrick told me in
19 June that Stockton's library was going to be
20 closed and I was no longer going to be the
21 librarian. Thanks to the diligent work of our
22 volunteers, the library opened in, I think,
23 February, or was it March.
24 Anyway, I did find in my reading the

1 CReATE Research Brief on School Closures and it
2 says that, "When a school is closed, the
3 facility is shutdown, school staff is displaced,
4 children are sent to other schools, and the
5 community loses a vital resource." Thanks,
6 Symantha.
7 All right. It says that, "In the
8 current round of school closures, the Chicago
9 Public Schools has stated that it is not closing
10 schools based on performance, but is looking
11 strictly at the utilization of a facility.
12 However, through the 2000s, the predominant
13 justification by CPS for closing schools was the
14 need to shutter or turn around standardized test
15 scores and attendance." Which will it be next
16 year? Huh.
17 All right. It says, "School closings
18 will negatively affect the achievement levels of
19 students in the receiving schools." And it
20 quotes studies, if any of you are interested, I
21 have the materials.
22 Let's see, "In the current round of
23 school closures, Chicago Public School leaders
24 have changed tack and instead are focused on

1 saving the district money by closing
2 underutilized schools."
3 "There's a relation between closures
4 and charters: Chicago Public Schools and
5 charter schools operators consistently claim
6 that school closures have nothing to do with
7 charter schools and that CPS will not repurpose
8 the closed schools into charter schools.
9 Briefly, charter schools are funded with public
10 money but are privately operated (either by
11 for-profits or non-profits)," Mr. Cawley, we
12 know about those, "and therefore are removed
13 from public decision-making processes."
14 "There are many reasons to believe that
15 school closures are directly related to the
16 expansion of the charter school system. First,
17 the budget deficit, in part, can be attributed
18 to the costs of expanding the charter school
19 system."
20 "Second, there is a strong local and
21 national trend of converting closed public
22 schools into privately operated charter
23 schools."
24 "Additionally, charter schools do not

1 save the district money. CPS compensates
2 organizations for, approximately, 75 percent of
3 charter schools' operational expenses."
4 "Third, Chicago Public Schools
5 currently has plans to expand their charter
6 system."
7 "Fourth, charter schools have created
8 the conditions under which traditional
9 neighborhood schools are considered
10 underutilized."
11 MR. DE LONGEAUX: Can you, please, conclude.
12 MS. PESENTI: And, "Finally, the people in
13 charge of the closure process and Chicago Public
14 Schools leadership are supporters of charter
15 school expansion. The current CPS CEO,
16 Barbara Byrd-Bennett, is a Broad Foundation
17 executive coach, training superintendents in the
18 principles of business model school reform."
19 MR. DE LONGEAUX: Your time is up.
20 MS. PESENTI: Read, people, in your library,
21 or if it's closed, at home. Thank you, very
22 much.
23 MS. BIENEMANN: Melanie Bienemann, again.
24 I have two propositions: One, how

1 about CPS rent us the Courtenay building for $1
2 for the next 100 years like they're doing other
3 charter schools and we make our own charter
4 school (Applause), in the next two years that
5 Courtenay building was turned into a charter
6 school or I'll be pretty upset.
7 ALDERMAN KAPLAN: I'm Alderman Kaplan, and I
8 wish I could have been here earlier but I was at
9 another event.
10 I, also, am a former teacher and it's a
11 very sad, sad moment for me. And I -- I don't
12 know the answers, but I think -- I appreciated
13 hearing your voices and I'll stand with you in
14 any way I can to make sure that your children
15 get the education that they deserve.
16 Thank you, so much.
17 (Whereupon, a discussion was had
18 off the record.)
19 ALDERMAN KAPLAN: I've -- I've been very,
20 very outspoken about my stance, I -- as a former
21 teacher, I do not support charter schools, I
22 never have.
23 (Whereupon, a discussion was had
24 off the record.)

1 ALDERMAN KAPLAN: Come into my office this
2 Saturday and we can talk more about it because
3 I'd like to hear more about it. Thank you.
4 MR. DE LONGEAUX: Well, thank you, very much,
5 all for coming. We close the session in 5
6 minutes.
7 Go ahead.
8 MS. BIENEMANN: So, I just want to know --
9 MR. DE LONGEAUX: Excuse me, we have one
10 additional speaker here. Can we, please, have a
11 bit of silence. Excuse me.
12 MS. BIENEMANN: So, why can't we have some
13 kind of compromise where it's 30 percent
14 neighborhood, 70 percent lottery --
15 MR. DE LONGEAUX: Sorry, excuse me, we have a
16 speaker here and it's very hard to understand.
17 MS. BIENEMANN: So, has anybody proposed
18 something like Courtenay and Stockton come
19 together for the first year and after that it be
20 30 percent neighborhood, 70 percent lottery, is
21 there any kind of compromise on the Board?
22 Well, like another speaker said, if
23 you're relying on the neighborhood and the
24 neighborhood's too small, in eight years when

1 our kids have gone through, you're going to have
2 the same problem.
3 MR. DE LONGEAUX: Thank you.
4 (Off the record at 9:26 p.m.)
5 (Back on record at 9:30 p.m.)
6 MR. DE LONGEAUX: It is now 9:30, and the
7 meeting is officially closed. Thank you all for
8 coming.
9 (Which were all the proceedings
10 had in the above cause this
11 date and time.)
12
13
14
15
16
17
18
19
20
21
22
23
24

1 STATE OF ILLINOIS)

2) SS:

3 COUNTY OF C O O K)

4

5 Sandra Di Vito, as an Officer of the

6 Courtenay, says that she is a shorthand reporter

7 doing business in the State of Illinois; that

8 she reported in shorthand the proceedings of

9 said hearing, and that the foregoing is a true

10 and correct transcript of her shorthand notes so

11 taken as aforesaid, and contains the proceedings

12 given at said hearing.

13 IN TESTIMONY WHEREOF: I have hereunto

14 set my verified digital signature this 12th day

15 of April, 2013.

16

17 Sandra DiVito

18 Illinois Certified Shorthand Reporter

19

20

21

22

23

24

A

ability 23:4 75:14
able 6:21 22:3 41:5 43:5 47:5 57:9 71:3 74:17 75:23 83:21
aboveentitled 1:8
absolutely 36:10
absorb 21:15 48:22
academic 22:20 74:16
academically 26:10 59:23 62:13
academics 74:13
accepted 50:9 54:20
access 60:12
accessibility 79:12
accommodate 57:18
accomplish 25:10
accomplished 32:5
accountability 24:2
accountable 21:22
accurate 63:17
achieved 43:13
achievement 18:16 93:18
acknowledge 14:19 35:15
action 4:7 34:12 48:4 48:12,15
actions 9:18 16:3 47:17,19 48:14
active 37:13 39:4
activity 37:8
ada 79:12
adacompliant 79:13
adding 72:12
addition 8:14 9:5 17:9 47:23
additional 8:14,16 11:1 13:17 72:14 72:15 75:4 97:10
additionally 94:24
address 35:9 68:16
addresses 14:13
administration 11:14 22:2 30:17 40:18 41:24 42:2 46:2 72:3 73:9 74:15 76:6 77:8 91:6
administrat... 52:10,11
administrative 1:15 4:10
administrators 21:17 28:3,20 37:17
admissions 37:11 38:24
admit 70:9
admitted 75:13
adore 45:15
advance 28:2
affect 71:24 93:18
affiliation 17:19 24:12 59:12 77:16
aforesaid 99:11
afraid 65:10 81:23
agassiz 38:16
age 28:13
aggressive 22:22
ago 43:9 54:22 62:7 86:21
agree 55:5,21 80:3 92:9
agreed 62:11
agreement 12:6
ahead 97:7
aids 68:13
airconditio... 10:17 78:16
alarms 8:18
alderman 3:17 44:4 45:6 96:7,7,19 97:1
allaccredited 68:12
allow 56:19
allowed 28:3 29:6
alongside 86:6
alonzo 2:13 39:11 40:11
alternative 58:13 89:12,13
alternatives 57:24
amazing 28:10 66:14,21 82:23 85:3
amelia 61:22
amenities 18:3 74:18
american 84:8
amundsen 1:9
animals 68:24
anne 52:24 54:7
announcement 50:21 70:18
annunzio 2:14 39:12 42:12,13
answer 6:7,15 15:12
answered 53:4
answers 80:16 96:12
anxiety 22:17
anybody 45:11 70:23 97:17
anymore 85:11
anyway 21:6 78:11 92:24
apologize 50:6
apparent 33:16
applause 23:10 32:10 33:2,8 35:19 36:3,15,19 51:8 53:11 55:3 58:11 58:24 60:3 61:1 79:5 80:18 82:14 90:12 96:4
apple 52:7
applied 64:17
apply 12:1
appreciate 36:4 46:20 49:18 52:21
appreciated 96:12
appropriate 60:3
approximately 95:2
april 1:8 5:11 11:24 17:9,11 30:2 99:15
area 23:8,9,12 33:6 44:24 53:20
areas 87:17
arent 80:17
arguably 40:15
arithmetic 33:17
articulate 71:7
arts 26:19 37:24 59:15,17 65:9
aside 82:24
asked 6:12,17
asking 21:23,24
assessing 75:15
assigned 11:16
association 68:3
assured 79:23
atmosphere 74:13
attacks 45:1
attend 34:18 39:14 43:6 57:9 63:5 64:6 71:3 74:4
attendance 11:16 14:24 63:12 78:9 93:15
attended 26:24 33:12
attending 62:2 63:17 91:16
attends 82:19
attention 62:17
attorney 24:15
attractive 33:1
attributed 94:17
attrition 59:4
audacity 33:8
auditorium 37:23 65:15,22 74:21
august 12:24
autism 54:12 73:13
available 12:1 55:9 75:5
average 19:19
award 84:21
aware 75:18

B

back 11:3 14:21 25:5 43:2 64:14 72:22 73:15 90:7 98:5
backgrounds 19:18
backpacks 18:11
bad 21:3 45:2 55:20
barbara 63:14 79:1 95:16
based 33:16 93:10
basic 33:17
basically 87:22
basketball 65:18
beacon 1:4
beautiful 60:19 87:12
beef 73:24
beginning 59:19
behalf 61:20 71:16
behavior 22:23 38:7,8
believe 10:4 31:8 38:20 41:4 45:10 75:10 77:6 94:14
bells 37:22
benefit 41:2 63:3 67:22 80:8 80:13 91:24
benefits 26:1 55:12 56:1 78:3 80:12
benefitting 64:7
benes 1:19 4:15 23:1 24:1 45:15
best 19:12 26:23 28:8 29:6 30:12 35:21 45:22 46:15 60:24 61:13 77:11 84:24 85:4
bet 59:1
better 10:9,9 19:4 21:16 37:16 39:17,18,22 39:23 40:4 40:15 60:12 71:19 73:8 80:22 86:20 88:14
betterment 62:6
beyond 8:23 17:6
bienemann 2:7 3:11,16,18 24:11 26:17 26:17 84:19 84:20,20,22 85:1 95:23 95:23 97:8 97:12,17
big 37:22 38:13 51:10 58:9 65:14 86:10 88:19
bigger 79:10 80:11
biggest 53:3 87:7
bit 14:22 44:11 50:5 60:9 62:14 89:18 97:11
blind 72:18
blindly 75:14
block 81:3
board 5:16 7:6 13:21 16:8,18 17:8 25:9 26:8 29:14 61:4 62:21 63:8 63:23 64:1 92:15 97:21
boat 54:13
body 29:12,15
bottom 6:22 14:11
boundaries 11:16 14:24 25:2,3 27:11 47:7 49:7 61:16 91:14
boundary 47:6
box 11:20 14:11
boys 18:24
brad 2:16 44:6 46:19
break 20:16
breath 79:9
bridges 3:8 77:14,17 77:17
brief 93:1
briefly 94:9
bring 59:20 68:12 74:17 76:24 86:13
bringing 56:4
broad 86:16 95:16
broken 64:9
brooke 3:5 69:18 71:14
brother 91:17
brought 29:9 39:2 62:21 88:11 91:15
bs 81:14,20
budget 19:15 21:4 94:17
build 46:7 59:20
building 5:7 8:10,13 9:11,11 10:6 10:14,22 11:12,15 13:9 15:4 21:18 25:12 25:20 31:5,7 38:18 40:23 43:21 46:13 48:23 56:5

60:18 66:15 66:24 72:8 72:10 74:19 75:3 76:12 82:1 96:1,5
buildings 9:8 58:16,18 67:9
bullet 11:20 88:22
bullying 22:22
bus 87:10
bused 72:21
business 95:18 99:7
busing 73:19
busting 33:4
bypassing 63:6
byrdbennett 5:16 7:6 63:14 79:1 95:16

C

c 52:12 99:3
cafeteria 74:24
call 7:21 44:5 48:21 67:9 69:23 76:9
called 15:3,6,8
calling 17:15 24:9 31:11 34:24 39:10 51:19 56:8 65:6 69:17 74:7 84:18 85:22 88:6
calls 25:15 32:11
cameras 8:19
cant 26:8 37:8 61:21 64:16 72:18 80:21 88:8 89:1,1 91:9,18 97:12
capacity 62:19
capture 49:14
captured 6:24
capturing 7:1
cardinals 70:22
care 14:10 63:19 73:11,17 83:23 84:1,6 87:24 90:11 90:14
cared 37:14
career 38:4 86:5
cares 64:9
caring 34:10
carlson 18:5
case 8:10 14:8 25:8 54:15
cassandra 2:4 17:17 20:24
cassie 66:23
caught 50:4
cause 98:10
cawley 1:14 4:4,9 29:8 34:22 35:8 36:1 44:3 49:11 67:12 94:11
cease 41:18 92:15
ceases 25:19
ceilings 13:8
center 10:18 26:19 59:15,17 65:9 68:10
central 17:11
century 13:7
ceo 16:7,17 32:18 79:6 95:15
ceos 79:4
certain 47:9
certainly 31:22
certification 61:4
certified 99:18
chair 53:2
chairs 42:15
challenge 21:20 22:1
challenges 37:19
challenging 13:15 14:20 45:21
chance 19:5 51:2 60:6 83:16 84:14
change 13:15,18 14:4 15:2 25:8 29:10,11,12 29:15 33:24 48:5,18 62:7 62:19 70:16 88:19 92:5
changed 93:24
changes 5:22 28:1,4 48:18 67:19
changing 32:13 48:7,8 72:11
chaos 52:16 72:14
charge 95:13
charter 33:6,9 94:5,7 94:8,9,16,18 94:22,24 95:3,5,7,14 96:3,3,5,21
charters 94:4
chicago 1:1,9 4:10,19 5:17 8:2 20:14 32:2,4 36:2,10,11 53:11 56:21 59:9 63:8,24 64:12 86:3 89:5,9 93:8 93:23 94:4 95:4,13
chicagoan 64:4
chicagoans 5:22
chicagos 89:15
chief 1:15,17,19,21 4:10,12,14 15:22 63:13
child 22:12,21 36:6 37:6 40:1,4 43:11,12 46:19 51:21 63:14 73:7 77:12 81:7 86:2,14 87:21 88:15 90:23
childparent 10:18
children 4:21 7:22 17:22,24 19:6,11 20:6 20:10,20,24 21:13,15 22:4 27:13 28:18 33:11 34:1,5,10,17 35:18,22 36:5,7 37:13 39:24 40:3,7 41:22 42:21 43:4,4,5,17 53:4,7,15,22 56:3,17,20 56:21 57:9 60:22 62:9 62:12 63:21 63:24 64:6 64:12 68:10 69:10 71:22 72:4,10,13 72:14 73:2 73:14,19 78:4 83:1 88:9 90:4 93:4 96:14
childrens 27:23 32:21 34:8 40:20 63:10
childs 62:20,22 75:1
choice 32:19,19 37:13 64:22 74:3,5
choices 32:18 64:22
choose 11:7 12:1 27:12 29:12 45:3 71:4 89:3
chooses 29:11
choosing 45:3 79:22
chose 17:24 27:12 37:21 38:5 40:13 50:13 74:12
chosen 38:2 62:5
chou 2:15 44:6,8
christine 2:22 56:10 61:11 64:14
circumstance 22:19
city 6:18 7:10 20:14 59:8 61:1,14 64:2 64:9 89:15
citywide 48:4 89:4,6,10 89:11
claim 94:5
clapping 51:8
clarify 29:8
clark 2:22 5:12 56:10 61:11 61:11 64:14
class 18:14 19:20 20:4 23:4 28:15 30:16 33:18 41:5 41:12 46:11 62:16 68:2 75:6 80:11 85:5,7,10 89:18
classes 76:20
classified 20:1
classmates 74:20
classroom 10:17 28:17 57:10,13,15 72:11 78:17
classrooms 18:8 37:4,9 38:13
claudia 3:15 92:11,13
clean 9:15
clear 7:17 29:16 53:12 56:13 73:22
clearly 63:17 73:16
close 10:5 21:9 26:2 27:3 60:21 63:7 82:13 90:9 97:5
closed 21:8 26:4 48:13 55:7 70:20 75:18 91:8 92:20 93:2 94:8,21 95:21 98:7
closely 4:22 64:11
closes 25:16
closing 17:6 20:19 21:5 25:16 26:7 27:2 31:24 41:15 41:17 48:17 55:3 58:15 66:5 70:21 90:16 93:9 93:13 94:1
closings 53:10 93:17
closure 1:2 5:3 26:2,9 48:20 91:11 95:13
closures 93:1,8,23 94:3 94:6,15
coach 95:17
cohen 2:9 31:12,14 31:14
collaboration 60:8
colleague 52:5
colleagues 50:2
collected 47:12
college 77:3
colleges 77:4
combination 11:2 67:22
combined 10:14 12:10,11 12:14 15:1 48:14
combining 27:18
come 17:18 21:2 23:18 25:1,2 26:6 29:13 37:19 46:6 53:12 56:14 57:2 58:19 58:22 67:6 69:3,3 85:22 87:16 97:1 97:18
comes 18:24 81:19,24
comfort 61:6 62:18,23
comforting 9:16
coming 4:6 8:3 23:2 54:16 67:19 82:2 87:2,8 97:5 98:8
commander 4:20
commanders 4:24
commenced 4:2
commencing 1:10
commend 36:10
comment 17:3 29:8 34:23 36:8 48:17
commented 35:14
comments 7:4 16:6 29:23 49:12,14
commitment 57:14
committed 38:6 39:4
common 75:12
commotion 44:11
communities 5:17 8:4 36:7 36:13 60:23 83:5 92:2
community 5:2,10,19 7:21 8:24 9:3 10:19 12:16 23:22,23 29:22 30:2 31:8,9 35:10 35:18 42:4 43:15 44:23 45:7,8 46:7 47:1,18 48:23 59:20 59:23 60:5,7 60:13 69:5,7 75:23 76:16 82:23 84:15 93:5
communitybased 12:18
compensates 95:1
complicated 91:23
compromise 89:20 97:13,21
computer 10:16 78:22
con 76:8
concern 7:15 22:22 23:14 35:20 51:10 53:3 68:6,17 79:10 85:14 87:7 88:3,23 88:24
concerned 22:24 32:7 37:17 47:4 47:16 53:8 56:16 57:10 71:21 87:1 87:19
concerns 35:7,10 47:8 77:10 83:7,8
conclude 95:11
concluding 1:11
conclusion 22:16
conditions 24:6 95:8
condos

68:19
confidence 46:23
confined 56:17
consciously 37:21
consider 71:10 72:12
considered 64:5 95:9
considering 19:22 91:11,19
consistency 72:1
consistently 94:5
consolidate 5:18 58:6
consolidated 50:22
contains 99:11
continue 10:18 37:10 43:22 71:5
continued 3:1 63:12
continues 7:14
contract 34:13
control 38:24
converting 55:19,21 94:21
coordinators 14:1
copies 16:18
copy 3:22
corinna 2:15 44:6
corporate 84:2
correct 83:13 99:10
correlation 62:22
costs 94:18
couldnt 28:17 46:23 77:21 85:11
count 37:1
counting 20:21
county 99:3
couple 6:19 68:13
course 22:17
court 6:24 16:4,19 49:13
courtenay 1:3 4:16 5:5,6 8:10,15 9:11 10:3,8 11:2 11:7,10,11 11:14,17 12:13,16 14:23 15:3 17:23 18:1,4 18:21 19:9 19:22 21:1,7 22:12 23:22 24:15,16,23 24:24 25:15 25:16,17,19 25:19 26:7,8 26:13,18,20 27:1,4,6,8 27:12,14,17 28:19 29:4 29:10,11,18 29:21 30:2 30:20 31:1 31:15,17,24 32:12,15,15 32:15,24 33:13,21 34:15 36:19 36:22 37:2,9 37:18 38:3,5 38:6,21,23 39:14 40:12 40:13 41:2,7 41:15,17 42:6,7,14,20 42:21 43:2,5 43:8,24 44:8 44:17 45:11 45:12 46:19 46:22 47:3,5 47:11,14,15 47:18 48:3,6 48:7,10,11 48:12,16,19 48:21,22 49:3,9,17 50:10,12 54:22 55:7 55:19,22,24 56:5,24,24 57:14,24 58:14,17,24 59:1,15,16 59:18,21 60:17,18,23 61:12 62:1,3 62:12 63:2 63:13 65:2,9 65:24 67:20 67:23 68:11 69:6,14,20 69:24 70:7 70:15,19 71:1,4,11,15 71:23 72:21 73:11,19,23 74:10,12 75:5,11,23 76:5,8 77:23 77:23,24 78:6 79:21 81:9,16 82:2 82:19,22 83:24 85:9 87:9,12,17 88:18 89:1,2 89:4,6,6,16 90:1 91:1,8 92:1,3,4,7 96:1,5 97:18 99:6
courtenays 10:13 21:12 23:10,12 30:21 39:6 42:17 49:5 55:23 56:15 79:21
courtenayst... 12:12 25:18
cover 73:12
covered 67:14
coyotes 68:23
cpc 76:24 77:1 86:12,14
cps 1:13 13:24 15:23 17:10 19:8,9 20:1 21:4,22 25:9 26:9,18,20 26:23 28:6,7 28:15 32:9 32:11,14,19 33:8,17 34:7 34:9,12 35:1 36:24 39:8 43:3,6 46:6 50:1 63:13 83:3 85:7,14 93:13 94:7 95:1,15 96:1
cpss 25:14 26:6
craig 1:19 4:15 24:1
cramming 33:4
create 12:23 24:18 53:19 75:17 80:20 93:1
created 38:5 95:7
crime 20:15
criminals 51:6
crisis 21:4
criteria 48:13 70:20
crossroads 71:8
crowded 33:24
csr 1:23
cta 9:7
cuddy 52:24
cuddys 54:7
culmination 5:15
culturally 59:24
culture 38:4 42:18 75:6
current 11:6 14:4 22:18 41:20 42:1,7 49:4 53:2 63:3 74:19 93:8 93:22 95:15
currently 11:12 15:1 17:22 25:3 27:8 31:9 40:23 47:14 62:2 63:16 82:19 95:5
curriculum 13:5
cusick 2:10 31:12 34:24 35:1
customized 14:18
cycle 20:16
cynical 70:17
cynthia 2:8 24:11 29:17

D

d 54:11,22 91:15
damn 83:24
dangerous 64:24
darn 60:24
date 98:11
daughter 26:24 31:16 33:10,12,20 36:3 40:14 55:14,17 57:3 61:12 69:20 70:4 74:20 88:18
daughters 28:5 90:3
day 22:7 42:23 55:1 78:4 87:6 99:14
daycare 28:11
daylight 86:17
days 6:19,20 50:3 70:7
de 1:16 4:12 15:16,21,22 20:3,17,22 22:10 24:9 26:16 29:7 31:11 34:24 36:18 39:9 40:9 42:11 44:2,5 46:17 52:22 54:6 56:7 59:10 61:10 65:5 66:3 67:3 69:16 71:13 71:18,20 74:7 77:13 82:16 84:18 84:24 85:19 88:5 90:20 92:11 95:11 95:19 97:4,9 97:15 98:3,6
deadline 11:23
deal 28:17
dear 29:24
debate 40:22
decades 25:20
december 50:19 54:19
decide 15:7
decision 64:11
decisionmaking 94:13
decisions 5:20
dedicated 32:21 74:15
deeply 62:3
deficit 55:11 58:6 90:10,15 94:17
definitely 45:5 76:17
degreeplus 61:4
deliver 47:1
deluded 75:2
demographics 19:23 21:11
denial 63:9
denying 56:20
department 4:19 8:2 9:6,7 19:16
depend 62:10
depending 13:22
depressed 81:17
depression 81:11,19
depriving 25:24
deputy 1:21 4:15
deramos 2:5 17:18 22:11,11
derek 3:8 77:14,17
derrick 16:12 92:18
described 9:19
deserve 29:4 39:16 96:15
deserves 28:8 40:4
destroying 32:14
detail 14:22
details 11:5,20,23
develop 60:6,7
developers 33:1
developing 4:23
developmental 34:6
di 1:23 99:5
diagnosed 54:11
dialogue 31:22
didnt 49:20 51:22 54:20 65:11 65:11 70:3,9 79:7 80:3,19 81:12
difference 62:17
differences 33:23 34:6
different 21:11 34:18 52:10 57:4 72:10,10 75:3 79:7
difficult 6:6 30:9 36:12
digital 99:14
diligent 92:21
dire 92:2
directly 94:15
disabilities 14:14
disappointed 62:3 74:14
discretionary 57:12 85:13,15
discuss 47:19 48:1,15 86:7
discussion 96:17,23
disgrace 63:23
disney 58:20 91:7
disneys 58:22
displaced 12:9 93:3
displayed 63:22
disservice 63:5
dissolved 12:13
distance 62:9
district 4:20 15:13 41:5,13 42:22 59:8 80:23 94:1 95:1
districts 19:5 79:2
disturbing 44:21
diverse 45:8 59:23
diversity 27:11 40:17 45:4
documents 16:19
doesnt 15:2 21:18 22:21 28:6 65:24 70:19 88:13
doing 8:7 12:20 28:20 35:21 43:18,19 55:12 58:8 81:13 86:1 96:2 99:7
dollars 33:10 63:18 64:7
dont 22:4,5 23:6,14 23:20 25:3 28:6 29:1,14

39:3,21 44:18,24 45:10,11 46:13 53:19 55:21 56:11 57:3,21 58:11 60:21 60:22 61:5 61:19 64:15 76:21 78:15 79:4 80:10 80:16 83:19 84:4,6,7 85:7,8 86:10 87:5,10,13 87:18,22 89:7,14,16 91:6,22 92:6 92:9,9,10 96:11
door 31:2 34:16 35:17 43:10 59:2 86:12 86:15
doors 8:20 20:19 60:1
doubling 27:19
doubts 81:12
dover 67:5,17,24 68:14
downgrade 32:9
dozen 36:24
dr 4:17 5:16 7:6
drama 38:17
drawn 54:23
drive 37:14 87:10
dropped 78:9
ds 54:10
due 17:6 26:2 48:12 51:5,6 62:8 72:14

E

earlier 35:9,13 51:5 83:7 90:24 96:8
early 18:14 54:13,16 54:17 55:16
easier 82:12
easy 66:12
echo 55:2
ed 57:15,17,18 59:16,20,22 62:21 63:8 64:1 71:24 72:2,4,5 73:1,6,8,14
educate 43:3
educated 43:11
educating 42:21,23
education 19:1,12,17 20:5 31:17 32:21 40:5 40:20 41:10 43:20 55:4 60:3 62:6 63:23 71:22 75:1 96:15
educational 18:15 24:19 40:17
effect 41:16 88:13,17 90:18
effected 71:3
effective 49:8
effects 19:21
efficiency 25:11
efficient 24:18
effort 23:22 61:23
efforts 19:13
eight 25:5,13 97:24
either 41:2 87:4 94:10
elementary 1:2,3 5:4 17:23 26:19 40:12,14,24 41:15 62:1
eliminating 32:20
elitist 85:2
elses 70:13
email 14:12
embrace 27:11 39:20
emotional 13:13 62:23
employee 86:3
empty 58:16,18
energy 34:7
enforce 52:2
engaged 70:9 75:17
engineer 53:18
english 14:15
enhanced 75:4
enroll 11:7 37:13
enrolled 11:6 17:22
enrollment 11:18 12:10 27:10 28:8 30:24 32:14 47:6,14 48:5 48:9,24 49:6 53:5 75:13
enrollments 49:5
ensuring 19:12
entering 34:14
enterprise 24:5
entire 34:20 47:21 83:3
entity 23:3
entrusted 46:23
entry 8:19,20
environment 13:7 33:24 46:14 62:14 62:23
equal 19:5 24:3 57:8 83:16
especially 41:8 46:21
essential 27:14
essentially 27:3 64:24
estate 33:1 83:15
ethical 33:2
ethnic 18:17
euphemisms 32:13
evening 4:6,14 5:8 15:21 35:1 40:10 46:18 49:15 80:24
event 30:5 96:9
eventually 34:18
everybody 6:14 7:8 28:21 51:22 52:1 70:13 71:10 85:5,6,24
everyday 38:9
everyones 57:10
everythings 58:10
evidence 5:1 34:9
exact 9:21
excellent 78:1 80:9
exceptional 74:13 75:15
excited 12:24 51:13 65:23 66:1 74:16,19 79:16
exciting 79:15
excuse 34:22 97:9,11 97:15
executive 95:17
exist 41:18 92:15
expand 49:3 55:8 89:1 95:5
expanded 58:21
expanding 58:14 94:18
expansion 91:10 94:16 95:15
expect 20:16 21:20 84:7
expectations 31:3 61:7
expected 68:5
expelled 28:14
expenses 95:3
experience 18:1 19:18 74:22
explain 15:18
explained 72:2
explanation 32:23
extra 8:11 12:9 14:3 14:9
extracurric... 67:9
extraordina... 23:13
extremely 45:8
eye 72:18

F

facilitator 1:16 15:24
facilities 21:12,14
facility 10:23 13:2 17:6 37:23 39:17,18 60:12 74:18 93:3,11
fact 6:16 35:15 41:9 42:21 53:16 83:3
faculty 12:11 62:18 74:15
failed 64:2
failing 18:6,7 19:15 64:23
fair 57:5 90:6
faith 45:19 46:1 66:18
fall 58:10
families 9:16 11:7 19:3 20:7,20 24:19 41:21 41:23 60:11 63:13 91:20
far 31:21 32:22 84:5
fashion 27:20 83:10
fast 89:24 90:2
father 49:16
favor 22:14
fear 20:8
february 54:21 92:23
federal 48:14
feedback 30:1
feel 5:18 9:17 22:19,20 23:5 29:14 30:3 42:16 62:18 88:13 88:14 90:1,4 90:5
feeling 74:3 90:3
feelings 30:4 54:3
feels 22:21
felt 37:16 65:13 82:8
field 70:23
fight 20:7 34:7
figuration 52:13
figure 55:11 80:21
figured 87:23
fill 50:23
filled 51:1
finalist 52:7,8
finalized 54:19
finally 9:5 12:15 14:21 34:14 95:12
finances 80:19,21,23
financial 80:20
find 6:21 30:16 44:20 61:6 75:16 80:22 92:24
fine 69:22
finish 20:17
finished 64:15
fired 51:15
first 4:5 6:1,17 7:19 9:22 10:2 11:3 17:8,14 24:22 28:14 28:15 41:4 42:22 43:3 53:9 65:10 76:5 94:16 97:19
firstclass 22:19
fit 82:23 85:11
fits 26:9
five 27:24 52:9,11 79:4
fix 64:10
flagrant 34:13
fledged 68:12
flying 88:22
focus 38:21
focused 93:24
follow 12:7
following 4:1 5:9 40:22 47:16 48:11
fooling 70:23
force 63:11
forced 62:9 73:4,15
foreclosure 62:8
forefront 60:2
foregoing 99:9
formal 24:1
former 18:5 68:2 96:10,20
forprofits 94:11
forum 5:24 47:18 48:14
forward 28:24 30:9,18 46:9 69:4,7
fostered 40:19
found 80:13
foundation 95:16
four 36:23
fourlanguage 38:17
fourmonth 5:15
fourth 8:23 95:7
frankly 23:7 34:5 45:7 58:11
free 60:2
fresh 13:10 79:14
friend 66:23
friendly 65:21
friends 50:11 60:13 66:2 77:3
front 86:12,15

frozen
70:5,6
fruitless
19:14
frustrating
6:5
fulfill
34:8
full
10:7 45:22
49:14 54:21
68:12
fulltime
37:24
fully
25:4 38:18
functional
8:20
functioning
33:3 54:11
fund
22:5 78:19
fundamentally
48:18
funded
83:14 94:9
funding
55:9 58:21
91:8,9
fundings
58:4
funds
57:12 85:13,16
furious
34:4
further
34:9
future
30:13,19 40:6
63:22
futures
40:7

G

gain
74:21
gaining
78:11
galicia
3:9 77:15
80:24 81:1
gang
20:15 86:13
gangs
86:19 87:19
gap
18:16
gard
3:5 69:18
71:14,14,19
71:21
gene
2:5 17:18
22:11
general
59:20
generally
24:17
german
84:11
getting
21:13 44:14
54:2 58:21
58:22 91:8
gifted
38:15
give
49:13 84:14
given
16:11 41:9
52:15 83:4
83:21 91:10
99:12
gives
19:3
glad
88:10
glass
45:21
go
11:3 15:1,18
16:24 17:5
37:21 39:15
39:16,18,19
39:23 40:2
46:12 50:14
51:22 56:17
58:5 59:6,7
65:1,2,21
67:7 72:22
81:23 84:10
87:21,23
89:8 97:7
goal
6:3 25:10
30:11 90:14
goals
24:18
goes
15:14 25:19
55:16 88:18
91:16
going
7:9 8:20,24
9:2 10:14
13:14,20
14:6 22:8
23:21 26:3
29:2,2 36:12
39:20 40:3
41:5 43:22
45:20,22,23
50:1,5 52:1
53:23 56:12
56:24 57:2
57:19 58:5,9
58:10,12,15
58:16 59:6,7
61:19 65:12
68:11,19
72:3 80:4,5
80:15 81:22
82:2,3 84:5
85:17 87:1,3
87:20 88:2,7
88:15,15
90:4,5,11,16
92:2,19,20
98:1
golden
52:7
gonzalez
3:7 74:8 76:1
76:2
good
15:21 20:5
21:4,14 27:7
30:10 35:1
36:5,6 39:8
40:10 43:22
43:23 46:18
49:15 52:6
69:13 76:20
77:1,4 80:24
82:23 83:1
84:13 87:11
grade
28:21,22 31:16
44:10 45:10
47:9 77:18
81:4,6,23
82:20
grader
18:20 74:10
graders
13:6
grades
18:11,14 44:9
44:19 47:11
50:3 78:24
graduate
24:24
grant
52:12 73:12
granted
26:1
granting
25:17
great
5:1 23:16,17
23:17 27:6,8
30:7 45:17
49:12,23
50:24 56:22
57:9 60:10
64:6 70:13
78:19
greater
47:13
greatness
53:19
grew
55:4
group
69:6,15
grouped
69:14
groups
8:4 18:17
grow
60:6,12
growing
20:11
grownups
20:12
guess
58:15
guide
18:4
guiding
5:20
guys
82:22 88:7
gym
37:23 65:15
gymnasium
74:23

H

hahn
2:11 31:13
36:22
hail
58:9
half
10:6 45:21
halfway
89:21
hallmark
41:6
hallway
72:13,14
hand
15:15 41:23
handout
6:2,9,22 7:17
9:19,22 11:4
12:19 14:21
15:11
hands
39:22
handson
74:21
hanging
22:1
happen
23:21 29:2
49:1 51:23
51:24 53:23
58:12 75:2
77:7 83:13
83:18,19
84:10,13
90:8
happened
18:21 42:17
70:18 74:2
81:2,17
happening
7:8 84:5 85:9
87:19 89:24
happens
77:10
happier
70:11
happy
33:20 52:2
70:9
hard
3:22 31:4,4
52:2,16
70:17 97:16
hardship
34:19
harmful
34:1
harvard
32:9
hasnt
53:3
havent
50:16 78:1
83:12
havoc
36:13
hawthorne
18:6
hear
5:3 6:3 18:10
18:13 22:4,6
36:20 50:5
70:13 77:9
83:7 91:13
97:3
heard
7:11 44:11
45:1 50:10
51:5,9,20
62:20 76:8
77:22 78:2
80:1
hearing
1:5 5:11,21
7:14 17:10
34:3 42:17
64:13 80:7
88:12 96:13
99:9,12
hearings
9:1
held
1:8
hello
20:23 56:12
65:8 67:4
69:19 71:14
76:1 85:24
92:12
help
13:6,18,23
14:3,13,18
21:15 39:19
39:23 68:15
73:6 77:21
88:8
helped
81:18
hereunto
99:13
hes
53:18 54:24
55:1 57:2
82:19
hey
89:19
heywood
2:8 24:11
29:17,17
hi
22:11 26:17
31:14 39:13
42:12 44:8
53:1 61:11
74:9
high
1:9 30:6 31:2
32:5,8 43:14
61:7 76:19
78:22 81:13
higher
39:24,24 55:9
higherfunct...
51:19
highest
42:24
highly
42:8 54:11
highperforming
26:10 44:16
highquality
30:15 43:20
hiring
27:19
hispanic
18:23
historically
75:12
history
42:20
hiv
43:3,5
hold
21:22 30:6
36:18
holding
16:13 18:9
46:10 79:9
home
28:12 62:8
83:1 95:21
honestly
79:10
hoops
65:19
hope
42:18 71:8
75:22
hopeful
70:16
hopefully
58:10
hoping
68:11
hospital
27:23
hostile
46:14
hours
52:14
houses
11:12
huge
88:16
huh
93:16
humanitarian
72:18
humans
84:2
humpherys
2:6 24:10,14
24:14
hurt
86:23
husband
62:5

I

ib
48:2
id
4:13 9:20
10:12 15:15
44:21 68:16
75:22 81:21
97:3
idea
50:8 86:4
identify
9:8 13:9
iep
54:18,19,22
ieps
34:9
ignoring
33:18
ii
58:20 91:7
ill
61:8 84:24
96:6,13
illinois
1:10 32:1 68:3
99:1,7,18
im
4:9 15:22
17:15 22:12
23:7 24:9,14
26:17,18
29:18 31:11
31:14,14
35:1,2 36:22
39:10,13,17
42:13,14
43:21,22
44:8 45:12
45:18 46:21
51:4,6,13,24
52:6,7,7,18
53:1 54:10
55:2 56:11
58:7 59:13
61:5,19,20
63:12,24
64:3 65:8,23
66:1,19
67:10,21,23
68:4,11 69:4
69:6 70:10
71:15 74:7
74:10,16,19
75:18 77:7
77:11,17
78:5,16 79:8
79:17 80:7,7
80:9 81:23
82:24 83:2
83:14 84:18
85:1,2,22,24
86:4,5,7,10
86:24 87:3
87:10,11,18
88:3,6,10,15
89:7,8 90:3
92:12,13
96:7

imagine 34:3 66:22 72:9
immediately 40:16 69:24 81:8
impact 62:20
impacts 58:1 92:2
impassioned 71:7
impediments 24:21 26:13
impending 47:19
important 4:22 5:20 15:9 30:3 35:15 38:19 44:15 47:2 84:16
importantly 4:18
impressed 33:7 67:21 68:4
improved 79:12 81:18
improvement 19:19
improvements 13:3
improving 32:10 48:1
inability 33:17
include 42:23 49:4,4
inclusion 75:7
income 32:6 37:20
incorporated 13:5
incorporates 48:5
increase 18:16 60:8
increasingly 20:10
individual 75:16
information 6:2,9
informed 74:3
infrastructure 8:21
initial 47:17 57:24
initiate 54:18
input 5:3,10,16,19 8:3,6,24 15:17 47:23
inside 44:23
institution 22:20
intact 29:5
integrate 83:4
integrated 45:8
integrity 27:21
intention 35:7
interconnected 72:19
interested 93:20
interests 84:3
interiors 79:14
intervention 54:13,16,17 55:16
intimate 74:12
introduce 4:13
intruders 82:6,11
invading 82:3
invest 55:4
invested 10:23 24:4 44:13 84:15
investing 13:2,13
investment 11:1 46:5 84:16
inviting 33:6
involved 23:24 32:20 48:4
involvement 40:19 51:11,13
ipad 79:11
ipads 13:4 78:24
ironic 31:20
irresponsible 63:22
issue 63:1,6 86:10 88:11 91:13
issued 18:11
issues 9:1 63:4
itll 6:20
ive 12:4 23:24 30:24 37:12 38:8 43:18 45:1 46:2 49:21 50:2 51:20 52:9 53:12,15 59:18 66:14 66:16 67:7 67:17,19 69:3,8 75:20 77:22 79:3 80:1,13,16 85:3 96:19 96:19

J

j 28:8,17,19
jack 84:3
jacoby 61:22
jb 26:18
jesus 3:7 74:8 76:2
jewish 84:8
joanne 4:17
job 36:12 52:16 61:5
jobs 83:14
john 2:6,17 24:10 24:14 49:16
joined 44:4
joint 79:23
js 28:8
judged 34:11
jujitsu 26:6 49:20
july 67:6
june 92:14,19
justification 93:13

K

k 99:3
kandalyn 2:11 31:13
kaplan 3:17 44:4 96:7 96:7,19 97:1
katie 16:6
keep 20:15 26:13 29:4 30:23 41:5 42:9 57:13 61:7 66:7 68:9 75:17 85:13 88:12 89:17 89:19
keeper 16:5
keeping 42:7
keeps 85:6
kerry 2:21 56:9 59:14
keti 2:20 3:13 56:9 88:6
key 7:4
kid 38:19 54:11 81:22 89:7
kids 8:13 13:6 23:5 25:3 35:23 37:16 38:21 39:4,7,8,13 39:16,18 46:11 53:24 54:1,2 55:12 60:11,17 63:6 65:17 66:13 71:24 72:16,20 73:8 78:14 79:10,15 82:2 84:17 85:5,11 86:6 87:1,8,16 89:4,6 98:1
kilmer 91:4
kind 12:23 21:20 33:22 66:9 97:13,21
kindergarten 18:19 28:5 34:15 38:15 50:18
knew 37:2 38:19
knife 81:8
know 6:5 8:13 10:21 14:8 15:18 19:1 24:16 28:6 29:1 30:3,6,7 33:21 35:23 36:4 41:17 43:15 44:15 44:18,22,23 45:5 46:6 47:2 49:2,19 50:16 51:6 51:11,17,18 52:7,19 53:5 53:6,20,22 57:16 58:4 58:14 61:19 65:11,12 66:4 70:10 71:6 73:17 80:15 83:24 84:4 85:7 86:23 87:9 87:18,23 88:8,21 89:20,24 90:3,4,12 91:9,20,22 92:9 94:12 96:12 97:8
knowing 20:11 61:6
knowledge 11:22 12:3
known 21:6 42:1
knows 28:21,22,23
kurth 3:6 74:8,9,9

L

lab 74:22
labs 10:16 78:23
lack 9:13 63:22
lacking 18:4
lady 88:19
lake 76:19
lancaster 3:12 85:23,24
land 33:5
language 14:15 26:19 59:15,16 65:9
large 35:12 63:10 75:5
larger 33:23 60:13 74:18 89:17
larren 44:7
latino 76:15
lavera 2:18 52:23 53:1
law 41:11 52:1
leaders 93:23
leadership 27:7 45:16,20 95:14
learn 37:8 38:22
learned 25:7
learners 14:16
learning 13:7 14:15 18:16 62:14 62:20
leave 16:18 25:1 40:3
led 5:21
lee 2:18 52:23 53:1,1
left 10:4 22:1 27:4 40:1 51:21 55:21
legal 25:14 26:5
letter 61:23 71:16
level 22:16 24:2,2 26:20 27:1 32:7 39:24 40:1 78:6,7 78:10,10
levels 26:23 93:18
librarian 68:12 78:19 92:21
library 10:16 68:2,3,5 68:6,9 78:18 78:20 92:18 92:19,22 95:20
license 1:24
life 72:20
lifted 83:11
light 29:24
limited 47:8
lindsay 2:14 39:12 42:13
line 7:22 60:20
lined 15:19
lineup 17:15
lip 38:10
list 21:7 27:2 31:24 58:1 58:19 59:2 64:19 78:5 85:20
listed 6:13
listen 16:2 71:9 80:4 80:5
listened 53:13
listening 52:20 67:20 86:8
literally 85:11
little 14:22 18:24 47:22 50:5 52:2 60:9 80:22 86:1,4 89:18
live 20:8 44:22 45:3,4 61:16 72:19 81:3
lived 67:5
lives 64:12 82:9 84:17
living 14:16
loaded 38:18 67:8
local 94:20
located 10:13 23:9,10 26:14
locked 67:10
lockers 65:16
logan 76:24
logic 32:9
long 21:6 30:24 42:20 69:3 72:6
longeaux 1:16 4:12 15:16,21,22 20:3,17,22 22:10 24:9 26:16 29:7 31:11 34:24 36:18 39:9 40:9 42:11 44:2,5 46:17 52:22 54:6 56:7 59:10 61:10 65:5 66:3 67:3 69:16 71:13 71:18,20 74:7 77:13 82:16 84:18 84:24 85:19 88:5 90:20 92:11 95:11 95:19 97:4,9 97:15 98:3,6
longer 58:5 92:20
longterm 90:14,18

look
13:8,10 23:10 30:9,18 58:8 60:16,16
looked
50:11 82:6
looking
36:23 61:5 69:4,6 78:5 78:16 79:17 79:19 93:10
looks
9:23 49:2 82:11
lopez
2:3 17:16,21 17:21 20:4 20:18
lose
39:1,8
loses
25:20,21 59:8 59:8,9 93:5
losing
66:9
lost
37:1 49:21 54:2 78:8
lot
7:15 9:19 12:4 34:6 44:10 45:9 46:4 51:2,16 58:16 73:22 73:23 74:4 77:22,22 78:2 79:10 81:10,10 83:8,10 84:4 87:4
lots
80:7,12
lottery
27:9,10,15,15 30:22 31:6 37:11,12 38:24 39:6 42:10 43:7 43:13 44:18 48:8,9 49:5 50:19,24 51:2 56:15 57:6 70:24 97:14,20
lotterybased
25:22 26:14
loud
49:22
love
28:20 51:11 62:12
loved
43:10
loves
28:19,21
low
32:5 37:5,20
lower
25:23 41:5,12 63:15
lsc
8:4 12:12,13 12:14 15:7 22:3 29:11 29:18 42:15 53:2 79:21 79:23,24 80:2
lucid
23:19
ludicrous
34:19
lurie
27:23
lyman
3:4 69:18,19 69:19

M

m
1:10,11 4:3 5:13 17:5,12 98:4,5
magazine
32:3
magnet
19:3 48:2
main
70:12 87:16 88:2
maintain
27:21 47:5 49:5 70:24 71:1,11
majority
47:3
making
8:19 19:13 24:22 37:12
malisa
2:19 3:14 52:24 54:8,9 90:21
manage
14:4
manager
54:15
managing
14:5
mandated
33:18
manner
63:2
map
10:2 15:2
maps
14:22
marc
3:17
march
50:19,20 92:23
margaret
33:7
marginalizing
57:19,20
maria
3:9 77:15 81:1
market
69:12
martin
2:21 56:9 59:13,14
mary
58:9
masters
61:4
materialize
23:20
materials
16:17 68:5 93:21
matter
1:8 43:21 51:13 53:16
matters
66:10
mayor
31:19 32:18 35:15 82:7,9 82:11
mean
23:6 28:6 39:15 42:19 51:10 52:6 83:13
means
24:24 25:9
meehan
3:3 65:7 67:4 67:4,13
meet
30:13 66:2,17 70:20 76:4,7 83:9 89:21
meeting
4:4 5:2 6:1,17 6:23 7:3,9 9:23 16:2,22 17:5 30:2,18 35:9,13,13 44:11 48:13 63:7 75:9 76:3 79:23 98:7
meetings
5:14 6:8,18 7:12 17:8 46:9
megan
2:10 31:12 34:24
melanie
2:7 3:11,16,18 24:11 26:17 84:19,20,22 95:23
member
29:19 35:2,4
members
1:13 9:3 35:18
memory
28:10
mention
44:3
mentioned
10:12 16:1 36:9
mercy
19:14
merge
19:20 30:5 48:6 83:22
merger
30:8 40:24 42:6 43:16 47:4 49:1 55:16 76:10 77:6 92:10
mergers
23:19
merges
55:11
merging
41:6
mesh
18:10
mess
80:20
message
47:1
met
5:7 37:12 39:5 65:17,23 75:20
microphone
17:15
middle
10:3 42:13 81:5
mila
2:9 31:12,14
miles
87:9
millions
63:17
mine
19:3 39:4
minority
19:18
minute
58:2 70:19
minutes
9:20 16:11 97:6
misconceptions
56:13
misfortune
32:24
misrepresented
42:18
missed
54:13
missing
51:3
mix
72:12
mobile
67:12,13,14,15
model
21:14 25:22 26:9 29:4 32:16 38:7,9 40:17 42:7 42:23 48:7 48:24 49:3,8 65:3 85:7 95:18
mom
54:10
moment
50:17 70:14 96:11
moments
52:15
monday
5:7 7:13 17:9 42:16 44:12 77:19
money
58:7,23,23,24 59:8,8,9 66:7 83:15 94:1,10 95:1
month
40:21
months
28:2 35:22 54:21 67:24
mornings
62:11
mother
18:23 31:15 88:9
move
13:6 19:4 25:22 27:24 28:3,24 55:24 62:1 65:23 69:8,9 70:7 72:4 82:12 91:19
moved
81:6,9,16
movement
32:8 37:7 42:7
moves
57:1
moving
36:2 46:9 48:6 48:7 65:10 66:6 70:4 72:9 81:13 89:13
multiple
17:1
music
37:24 65:15,19
myth
33:15

N

name
4:9 15:21 17:20,21 22:11 25:7,8 25:23 27:4,5 29:10,13,15 29:17 33:22 40:10 42:12 46:18 49:15 53:1 54:9 59:11,14 61:11 65:8 67:4 70:22 74:9 76:1 77:17 80:24 87:13
named
60:1
names
20:23 24:14 69:19 82:18
narrow
18:16
natasia
2:3 17:16,21
national
61:3 94:21
native
84:8
nature
48:19
near
23:5 30:19
necessarily
41:11
need
13:10 14:3,9 20:11 22:3,8 23:5 27:7 35:23 36:5 46:12 57:21 66:11 68:20 71:24 78:15 83:21 88:16 89:10,11 93:14
needed
12:10 36:3
needs
10:5 14:7,15 30:13 31:15 33:11,19 34:2,4 36:16 37:6 42:24 53:4,7 60:17 60:18 68:7 73:10
negative
18:1 19:21 62:19 76:21
negatively
93:18
negotiating
35:17
negotiation
31:20,21
neighborhood
18:2,3 19:9 24:23 25:21 27:10 28:16 34:16 35:2 37:15 38:23 41:19,19 45:1,5 47:7 48:9,24 49:6 49:10 53:13 54:14 55:19 55:20,22 56:17,19 57:1 61:16 64:17,18,19 64:23 68:18 68:18,20 69:2,13,22 72:22,23,24 73:3,5,5,15 73:16 76:17 76:22 77:5 78:15 87:2 87:21,22 89:2,17 91:1 91:2,4,13,14 95:9 97:14 97:20,23
neighborhoods
49:10 61:17 97:24
neighbors
67:17 68:1,14 69:8
network
1:20,22 4:14 24:2,4
never
21:12 31:24 47:20 85:17 96:22
new
12:8 13:1 15:3 15:8 25:6 27:20 30:10 30:11 42:2 43:7 45:6,24 46:12 47:4 66:2,2 72:12 79:22 80:9 80:10 81:24
newer
78:21
nice
65:12,18,21 76:6
nicety
37:6
night
5:7 49:19 69:1
noise
37:7
nonprofits
94:11
normal
20:4
north
1:4 35:4
note
7:2 16:3,5,5 17:3 30:21
notes
99:10
notice
86:1
noticed
51:1
notified
26:3
notion
52:4
number
14:9 15:19
numbers
6:13 14:12 37:5,9 64:19 85:17
numerous
47:10

nurtured 43:11
nurturing 12:21

O

o 99:3,3
obviously 10:14 11:10 72:23 83:22
occupied 40:23 63:20
occurring 27:16
odds 19:2,2
offenses 61:19
offer 10:9 73:23,24 78:6
office 17:11 97:1
officer 1:15,17 4:10 4:13 15:23 99:5
offices 5:12
officially 98:7
oh 39:17 79:7 80:18 89:7
okay 17:24 20:4 29:16 52:11 61:8 65:13 67:13 88:10
oldest 53:17
once 8:3 77:20 83:3 90:2,8,11
ones 76:14
oneway 71:9
online 7:7
open 16:21 27:9 30:23 66:7 68:9 77:9
opened 59:1 92:22
operated 94:10,22
operational 95:3
operators 94:5
opinion 41:1 61:24
opportunities 20:20 24:19
opportunity 5:10 9:3 10:9 12:9 16:10 19:5 21:13 46:20 47:20 49:21 50:16 51:18 56:21 57:8 60:4,10 69:23 76:4,7 83:21
oppose 31:18
opposed 9:16 42:5
opposite 26:11
option 61:17 89:9 91:21
options 11:9,18,22 12:2 18:24 48:1 64:16
orderly 83:10
organization 35:3,4
organizations 12:18 95:2
original 8:12
outburst 86:1
outcome 13:22
outperforming 18:20
outside 12:2 16:24
outspoken 96:20
outstanding 78:1
overburden 19:23
overpacked 18:8
overwhelmed 38:13 90:3,4,5

P

p 1:10,11 4:3 5:13 17:5,12 98:4,5
pack 15:10
page 10:2 11:4,4 12:19 14:11 80:14
pages 9:24 47:21
paint 79:15
parent 8:4,6 22:12 24:15 26:18 35:1 36:22 40:11 44:8 45:2 47:15 47:22 51:11 51:12 61:21 61:23 62:2 71:16 74:10 86:2
parental 40:19
parenting 34:5
parents 9:3 10:19 11:18 12:1 20:6 21:17 24:16 27:11 32:21 34:4 35:18 36:14 36:16 37:12 37:14,17,21 38:5,20 39:2 39:5 43:17 44:10 45:10 45:17 46:2,4 46:22 47:3,9 47:10,15 48:10 50:13 51:7 53:6,21 56:14 60:22 62:4 63:6 64:10 66:11 66:16 72:24 73:18 74:2 75:10 76:13 77:9,10 79:24 80:2,6 83:7 87:3,4 89:24
park 35:3
part 12:11 16:20 43:20 67:18 75:5,23 86:13 87:6 94:17
participate 74:23
particular 23:14
partitioned 74:24
partner 24:3
partnership 5:1 36:9,14,16
partnerships 12:15
pass 52:1 58:9
passage 7:21,24 8:7,23
passed 50:15
passionate 75:21
path 9:9
patrick 3:4 69:18,19
patrolling 88:20
peers 18:21 22:23
peirce 50:9,11,11,15
people 6:5,7 7:18 15:12 21:19 28:23 31:9 45:13 51:14 51:14 52:13 53:13 56:19 57:19 59:14 66:4 68:24 71:6 74:4 76:4,6,7,15 77:22 78:2 83:23,24 85:3 86:8,9 86:9 87:24 89:3,5,21 95:12,20
percel 4:17
percent 27:9,15 37:20 41:11 42:9 47:6,13 48:8 48:8 49:3 57:17,17 59:22 63:20 66:17 71:22 71:23 90:12 90:13,15 95:2 97:13 97:14,20,20
percentage 32:5 78:8
perfect 66:6,8
perform 33:17 39:24 74:20
performance 19:19 62:22 63:3 81:14 92:7 93:10
performing 25:23 55:10 62:13
period 6:4 17:3 27:17 29:3 55:3
permanent 16:20
person 86:11,13,18 87:14 92:15
personal 29:23 30:21 61:7
personally 60:4 75:22
personnel 8:16
pesenti 3:15 92:11,12 92:13 95:12 95:20
pete 3:10 77:15 82:17,18
petition 47:12
phenomenal 45:6,16,17,24
phil 1:21 4:15
phone 6:13 14:12
phrases 54:24
pick 91:18
picket 60:20
piece 32:24 80:14
place 7:12 12:22 17:9 43:16 44:14 46:11 46:15 50:13 58:11 65:2 70:2,15 73:8 73:11 75:6
placed 54:22 55:18
places 64:24
plan 10:12 14:18 19:15 20:14 21:3,4 30:16 41:2,16 43:18 44:14 46:11 47:21 47:22 78:13 88:13,17,17 90:13,14,18
planned 8:2 27:24
planning 21:5 56:23 63:22 77:20
plans 4:23 95:5
play 64:11 65:20
playground 10:16
playing 65:18
please 16:3,18,24 17:3,14,18 17:19 24:12 25:11 36:18 43:15 59:11 71:9 77:16 84:17 85:21 95:11 97:10
pleasure 66:17
plenty 15:12
point 7:17 28:11 44:19,22 46:10 68:8 70:12 78:9
points 42:19
police 4:19,23 8:2 9:6 36:10,11 88:1,20
policies 56:1
policy 32:14 47:6 48:5 49:6
politics 54:1
poor 19:17
population 57:18
populations 21:10 33:13 34:12 41:1,7 41:10 57:16
positions 12:10
positive 12:21 38:7,8 43:3,5
positively 83:19
possible 12:6,22 19:13 29:5 46:15 53:24 54:4 66:13 74:19 83:19
possibly 21:7 61:14 91:3,3
posted 6:11,18,20 7:7
potential 23:16,17 45:6
potentially 46:12 72:11
power 29:15
powerful 59:5
practical 24:22
predominant 93:12
preference 34:17 57:2
prek 10:10 58:21 59:1 78:12
preparation 11:1
prepare 28:7 72:5
prepared 28:23
preschool 28:13,14 33:13
presence 4:24
present 1:13,18
presented 31:19 47:20
presenter 1:14
preserved 22:24
president 68:3
press 35:16
pretty 44:12 52:6,16 96:6
previously 31:1 59:21
prices 84:3
pride 57:12
principal 4:16 14:1 18:5 27:20 61:18 79:19,19,22
principals 13:16,24 14:2 14:3
principles 95:18
printing 10:1
priorities 43:1
private 59:6 89:12
privately 94:10,22
pro 76:8
probably 55:18 57:2 58:4
problem 63:9 64:18 72:17 86:7 98:2
problems 28:11,12 86:19 86:22
procedural 25:17 28:1,4 35:7
procedures 56:1
proceedings 1:7 4:2 98:9 99:8,11
process 5:15,21 7:13 11:22 13:19 13:23 15:17 26:1 35:19 37:11 51:5,6 74:2 79:20 83:3 95:13
processes 94:13
procurement 1:17 4:12 15:23
professional

60:7 61:7
professionally 60:6
profitable 33:11
program 7:21 10:11 11:22 12:3 13:3 38:15 38:17,17 48:2 70:24 78:12
promise 51:20 79:8
promised 51:17
promises 79:5,7 80:7
promising 32:4
promote 69:12
proper 74:22
property 33:9
proposal 5:18 19:8 22:14 25:15 31:18 32:23 34:20 48:6 48:18 55:5 61:24 74:11
proposals 24:17 48:4
propose 39:15
proposed 1:2 5:23 11:5 13:19 16:3 26:1 30:1,8 48:12 97:17
proposing 4:8 27:3 55:8
propositions 95:24
protect 20:13
proud 26:18 49:16 64:3
proven 18:15 19:17 32:20 42:8 49:8
provide 16:9 22:3 43:20 78:13
provided 9:22
providing 13:4
public 1:1,5 4:11 5:11 17:10 33:5 62:10 86:3 93:9,23 94:4,9,13,21 95:4,13
publicly 82:21
puente 2:24 65:6 66:4
punished 32:17 63:21
pupils 72:12
purpose 16:1
put 34:22 69:10 89:2
putting 70:21 73:24

Q

qualified 73:1
quality 68:4
question 6:15 15:6 25:11 63:11 80:5
questionand... 6:4
questions 6:7,10,10,12 6:16 7:3 15:13 61:2
quickly 15:20 52:3 81:18
quite 10:22 23:7 44:11 45:7 58:11 62:14 87:4,11
quotes 93:20

R

racial 18:17
raised 88:9
raising 18:23
rakanovic 2:19 3:14 52:24 54:8,9 54:9 90:21 90:22
rambling 50:5
ranking 26:21,22 63:16
rate 59:4
rates 20:15
rating 61:3
rational 32:23 33:2
ravenswood 1:20,22
read 18:13 29:20 56:12 61:20 71:15 85:3 95:20
reader 28:9
reading 68:10 92:24
real 13:7 33:1 74:21 83:15
reality 25:16
really 15:7 16:2 36:20 38:9 44:13,24 50:12,17 51:13,23,23 52:18 53:3,7 55:5,13 56:11 57:21 59:13 65:14 65:18,21 69:11 70:23 76:10,11 79:9,15 83:12,23 84:6 86:7 89:14 90:11 91:19,22,23
reason 22:17 32:6 58:1 85:9
reasons 42:5 94:14
reassure 7:17
receive 7:20 8:17 10:24 14:18 19:12
received 64:21
receiving 5:5 8:11 55:15 93:19
recipients 52:12
recognize 13:16 14:8
recognized 40:16
recommend 13:20
reconfigura... 26:22
reconsider 64:10
record 16:6,20 96:18 96:24 98:4,5
redirect 91:12
reduced 18:14
reducing 32:19
reed 2:16 44:6 46:18,19
reevaluate 63:11
reflected 37:18
reform 95:18
regard 30:7
regarding 5:3 16:2 61:24
regardless 55:7 75:14
regretted 50:17
reiterate 7:16 90:24
related 94:15
relation 94:3
relevant 9:2
relies 21:16
relocated 11:12
relocating 48:17 64:5
relocation 5:6 32:11 40:22 48:20 74:11
relying 97:23
remain 16:21 27:8,14 27:18 75:23 81:21
remaining 16:15 75:22
remarried 87:14
remember 87:13
reminder 17:7
remove 48:11
removed 61:18 94:12
renaming 92:1
renovated 67:16
renovation 63:18
rent 96:1
reopening 11:21
replaced 42:2
report 1:7 36:21
reported 1:23 99:8
reporter 7:1 16:4,19 36:20 49:13 99:6,18
represent 79:24
representative 47:10
representing 41:8
represents 47:13
reprieve 36:2
repurpose 94:7
request 70:24
require 41:11
requirement 43:9
requirements 34:8
research 93:1
reservation 21:21
reservations 83:11 91:3
residency 62:8
resident 23:7
resolution 63:9
resource 15:10 93:5
resources 14:13 55:8 56:3 73:1,7 75:4
respect 75:7
responses 6:11
responsibil... 14:5
rest 58:20
resulting 23:3 48:19
retain 12:17
retaining 92:6
retire 69:4,5
retired 13:24
return 12:23 13:11
returning 91:4
review 16:18
reviewed 16:7
rewards 38:11
ridge 1:20,22
rigger 74:16
right 6:6 8:5,8 20:6 25:5 26:6 40:3 70:10 70:14 82:21 84:23 86:15 88:18 89:14 89:23 90:7 91:5 93:7,17
rights 25:18
riot 83:20
rise 22:14
risk 23:18
rivas 2:13 39:11 40:10,11
rogers 35:3
romana 2:24 65:6
room 37:7 65:15 72:4 73:13 85:11
rough 28:13
round 7:13 93:8,22
route 7:22,24 8:23
routes 8:1,1,7 9:14
run 32:16 80:23
running 52:13
rushed 27:20

S

s 19:16
sacrifice 21:24
sacrifices 19:10 62:4
sad 96:11,11
saddened 62:3
safe 7:21,24,24 8:7 8:23 9:15 22:21 23:5,9 23:13 33:20 78:14 89:2 89:16
safer 82:8
safety 4:21,23 7:15 7:18 9:1,13 9:18 10:12 12:4 18:12 63:10 78:13 88:10,12,16 88:17,23
sake 89:15
salemi 1:21 4:15
san 9:7
sandra 1:23 16:5 18:5 99:5
satisfied 22:18
saturday 97:2
save 35:4 95:1
saving 94:1
saw 37:2 39:2 65:14 70:1
saying 51:24 52:18 88:3
says 31:19 51:15 52:1 62:14 78:5 79:7 93:2,7,17 99:6
scary 20:10
scheduled 17:4 47:17
scholastic 63:15
school 1:9 4:14,17 5:4,5 7:23 7:24 8:1,9 8:16,17 9:10 10:8,9,20 11:11 12:8 12:12,14 13:1 14:6 15:2,3,5,8 16:3,7,18 17:19,23 18:2,3,6,22 19:4,10,11 20:9,19 21:14,16,18 21:19 22:7 23:4,6,8,13 24:13,23 25:4,15,21 25:23 26:3 26:14,20,22 26:24 27:1,9 28:16 30:11 30:11,12,22 31:7,7 32:2 32:4,12,19 32:20 33:21 33:23,24 34:16 35:3

37:4,14,16
37:20,22
38:7,16,24
39:14,23
41:16,19
42:1,10,13
42:14,20,22
43:3,13
44:18 45:24
45:24 47:18
47:19 48:4
48:13,19,20
48:21,22,24
49:4,9,10
51:12,16
52:8 53:2,10
53:13,15,16
53:17 54:14
55:3,19,22
55:24 56:19
56:22 57:9
58:1,3 59:5
59:12 61:1
61:14 62:10
62:16 63:1,7
63:15,20
64:6,8,16,19
64:21 65:3
65:14 66:5
66:15,24
67:1,8,8
69:10,11,12
69:22,24
70:1 72:22
72:24 73:3,5
73:5,16 74:4
75:19,20
76:10,20,22
77:1,16,18
78:1,6,7,7
78:13,18
79:2,14 80:3
81:3,5,5,7
81:12,15,19
81:21,24
84:1 86:16
87:1,5,7,8
87:12 90:16
91:4,5,10,13
91:17 92:6
92:10,14,17
93:1,2,3,8
93:17,23,23
94:6,15,16
94:18 95:15
95:18 96:4,6
schooling
36:4
schools
1:1,19,21 4:11
5:18 7:20
11:13,24
12:2,21
13:14 19:3
20:12 21:5,9
22:2 24:18
26:1 27:2,19
28:7 30:5
32:2,16 33:3
33:6,9,15
34:19 35:5
36:23,24
40:14 41:6,9
41:17 43:6
50:22 51:2
51:19 55:10
57:4,11 58:5
58:15 59:6
60:21 61:17
64:17,18,23
66:5,6,7,21
67:15 72:23
73:15 74:1
76:17 77:5,8
79:18 82:13
83:22,23
85:18 86:3
87:20 89:11
89:11,12,16
90:10 93:4,9
93:10,13,19
94:2,4,5,7,8
94:8,9,22,23
94:24 95:3,4
95:7,9,14
96:3,21
schoolwide
38:10
schwabb
52:8
science
10:15 42:13
74:22
scoreboard
70:22
scores
27:21 31:4
32:8 37:18
43:14 93:15
scrutiny
26:5
seams
33:5
sebastien
1:16 4:12
15:16,22
second
5:2 11:4,20
17:7 25:14
28:16 31:16
32:3 51:2
94:20
secondary
50:24
secondly
8:9 41:13 48:3
49:1
seconds
52:4
security
8:11,12,14,15
8:22 12:5
61:5 88:1
see
6:24 7:8 10:2
10:4 14:12
22:5,23
23:14 24:20
26:5 31:21
32:22 46:5
60:5,10,21
74:20 76:21
76:21 78:4
82:2 85:8
92:6 93:22
seeing
37:3 80:8,9
88:8
seen
23:18 37:18
38:8 83:12
seethrough
18:10
select
47:9
selected
32:3 75:13
selection
79:20
selftaught
28:9
selling
33:5
semantic
26:6 49:20
semester
28:15,16
send
17:24 25:3
57:4 58:23
89:5
sending
1:3
sense
84:2
sensory
73:13
sent
53:15 93:4
sentence
20:17
separate
37:23 57:3
61:19
separately
66:21
seriously
64:5 71:21
79:5
serve
10:19 33:10,13
33:14 56:3
served
47:24
service
38:10 86:5
services
55:15
serving
14:1
session
97:5
set
63:8 99:14
setting
19:20
seven
43:19
sham
35:19
share
16:11 75:11
shared
7:5,6
shes
28:10,20,23
55:15 87:13
87:14
shoot
65:19
shooting
86:12
short
15:11 27:17
29:3
shorthand
99:6,8,10,18
shot
86:14
shouldnt
89:21
show
11:21 16:14
42:19
showing
14:22
shown
92:7
shows
10:3
showup
16:24
shut
34:16 35:17
85:14
shutdown
20:9 93:3
shutter
93:14
sibling
34:17
sick
88:7
side
35:4 51:14
89:19
sides
10:1 76:8
sight
66:9
signature
99:14
signatures
47:12
signed
16:10
significant
24:21 32:8
signup
16:23,24 17:1
85:22
signups
16:21
silence
97:11
similar
6:1 21:10
23:11 83:8
simply
73:6
sincerely
30:20
singapore
55:4
single
7:1 18:23 80:8
80:13 87:6
sister
71:4
sit
32:24
site
81:22
sitting
8:5 16:13
situation
14:23 24:7
30:1 79:17
situations
14:17
six
28:2 92:18
sizable
41:9
size
27:19 32:13
39:1
sizes
18:14 20:4
30:16 33:18
41:6,12
57:11,13,15
62:16 75:7
80:11 85:5
85:10 89:18
skills
60:8
slams
34:16
slowly
58:8
small
19:20 27:8
30:16,24
33:18,21
37:3,4 57:15
58:3,5 62:16
67:7 75:6
76:23 85:5
97:24
smaller
85:10 89:18
smooth
53:24 54:4
78:13
smoothly
15:14
social
13:13 34:13
society
34:10
socioeconomic
63:4
solely
21:16
solid
44:14
solutions
26:12
solved
63:2
somebody
17:1 49:11
80:22 86:22
91:7
son
18:9,17 34:14
36:23 37:6
38:11,14,16
50:8 53:17
56:23,24
57:3 61:15
65:1 76:23
76:24 81:1,2
81:7,13,16
81:24 82:4
82:19,24
sons
18:12 62:2,6
sorry
16:6 39:17
66:20 67:11
72:17 76:23
77:7 85:24
90:22 97:15
sort
51:18,24
sorts
52:15
sought
5:16
sound
8:21 76:18
sounded
50:12
south
5:12
sp
2:23 65:6,8,8
space
58:20 60:12
spark
12:23
speak
16:10,23 17:1
35:6,8 45:10
45:11 46:21
71:18 76:18
85:21
speaker
16:11,14,21
17:16,16,17
24:10,10
31:11,12,13
39:10 44:6
52:23 54:7,8
55:2 56:8
69:17,18
74:7 77:14
82:16 85:20
97:10,16,22
speakers
2:1 3:1 15:19
17:14 46:24
speaking
19:7 77:21
special
14:7,15 31:15
31:16 33:11
33:19 34:2,4
37:3,6 39:1
39:3 41:10
42:24 50:12
50:18 53:4,7
57:15,17,17
59:16,22
70:2,15 71:1
71:12,22,24
72:2,4,5
73:1,6,8,14
74:14 86:2
specially
73:9
specials
37:24
specific
35:10
specifically
35:6 50:7
speech
16:16 36:19
50:1
spend
63:18 89:3
spending
19:10
spent
36:22
spite
38:1
spitting
53:14
spoke
35:8 76:2,13
76:14,16
77:19
sports
74:23
spot
38:14,16 64:21
spotlight
32:1
spread
47:11
square
76:24
ss
99:2
stability
20:11 35:21,23
36:3 52:4,19
stacy
2:12 39:11,13
staff
1:13 8:15 30:6
33:21 40:18
41:24 42:3
62:18 64:1
66:16 68:8
77:24 80:1,9
80:10,10
93:3
stage
65:22 74:21
stance
96:20

stand 20:7 96:13
standardized 93:14
standards 26:21,23 63:7
standing 15:12
standpoint 8:22 12:5
stands 22:15
stapled 9:24
start 28:13
started 7:13 41:14 69:21
starts 22:7
state 17:19 24:12 33:19 59:11 77:16 99:1,7
stated 41:14 93:9
statement 29:20
stats 23:11
status 37:12 39:6 56:15 57:6
stay 8:12 11:11 12:11
stayed 49:19
staying 69:5 78:14
stellar 24:6,7
stem 48:1
stenographic 1:7
step 90:6
stepdaughter 76:19 77:2
stepping 36:11
stepson 77:2
stockton 1:2 5:4,6 8:10 8:12 9:10,11 10:3,5,10,18 10:22,24 11:2,6,13,15 11:15 12:8 12:12,15 13:9 14:23 15:1,4 19:21 19:24 21:15 23:23 24:23 25:2,4,5 29:22,22,24 30:8 31:10 33:12 39:16 39:20 40:24 41:3,7,14,22 42:6 43:15 43:24 44:24 45:18 48:23 48:23 53:2,5 53:14,15,17 53:19 55:6 55:10 56:2,4 57:1,14,16 60:5,17,18 60:23 62:1 62:24 63:5 63:19 65:11 65:13,24 66:14 67:7 67:21,21 68:2,10 69:14 71:23 73:13,20,22 75:10,11 76:11,11,14 76:23 77:1 77:18 78:2,7 79:3,20 80:8 82:1,24 83:6 83:7,23 85:2 86:14,24 87:15,18 89:3,8 90:1 91:23 92:1,5 92:14,14,17 97:18
stocktons 25:12 63:3 75:18 92:19
stool 40:23
stop 63:21 88:22
store 70:6
stories 70:13
story 85:3,4
strangers 80:11
strategies 18:15
strategy 30:23
street 1:4 67:5,17 68:1,14,21 71:9 87:2,8 88:23
streets 9:7
strengths 75:15
stressed 60:22
stretch 60:8
strictly 68:24 93:11
strong 23:22 24:19 94:20
stronger 60:7
strongly 31:18
structure 71:24
structured 30:13
struggled 18:9
stuck 79:6
student 2:23 18:19 19:20 24:15 31:3,15 40:11 41:1,7 49:17 53:5 65:8,9 71:15 75:16 83:6
students 9:9,16 10:10 11:6,8,10 12:7,22,23 13:11,14,18 14:7,9,14,16 14:17 18:7,9 19:17,22,24 21:18 22:2 24:24 25:1,2 25:22 29:6 30:14 31:3 32:6 33:19 33:22 36:15 36:17 37:20 39:19 41:3 41:20 43:21 43:24,24 44:9,16 51:7 51:16 56:5 58:19 59:6 62:1 63:4 65:16 66:10 66:18,19 67:10 72:6,9 72:15 74:16 74:17 75:8 75:12,17 77:23 78:3 78:24 79:21 80:9,14 82:1 83:6 92:5 93:19
studied 28:7
studies 19:16 93:20
stuff 80:19 84:4
stupid 58:7
submitted 3:22
suburbs 59:7 64:5 69:9 89:13 91:20
succeeded 43:4
succeeding 20:18
success 24:4,20,21 32:17
successful 27:15,18 42:8 49:9 85:18
suffer 41:23
sufficient 68:8
suggest 9:13
suggestions 47:24
suggests 48:6
summaries 6:23 7:5,7
summarizes 47:22
summarizing 7:3
summary 12:20 48:10
summer 11:1 46:7 72:6
superintend... 95:17
superior 61:3
support 7:20 14:2 21:23 22:9 27:7 42:6 74:11 78:21 96:21
supported 38:22
supporters 95:14
supportive 24:17
supports 8:18 13:13,17
supposed 40:7
sure 6:14 7:23 8:5 8:7,19,21 9:14 10:11 10:15 15:14 21:22 45:18 49:14 56:2 59:13 63:12 63:24 67:23 82:24 87:4 87:11 90:17 96:14
survive 60:24
sweet 87:14
symantha 3:12 85:23 93:6
synergies 23:18,20
system 20:19 32:17,18 64:8 94:16 94:19 95:6

T

tack 93:24
take 6:20 9:20,21 21:14,24 23:21 33:9 43:16 70:4 71:10 79:4 87:20 90:6 90:11,14
takeaway 39:6 59:5
taken 7:12 74:5 87:24 89:10 99:11
takeover 76:11 77:6
taker 7:2 16:5
takes 34:6
talent 23:12
talented 75:21
talk 50:7 56:15 57:6,23 59:13 78:2 97:2
talked 12:4 45:15 83:5
talking 35:20 54:24 57:7,8,11 59:4 86:11 89:7,8
tamiye 3:3 65:7 67:4
tammie 87:12
taryn 3:6 74:8,9
taste 55:20
tax 33:9 83:15
taxpayers 63:18 64:7
teach 43:23 73:17 77:18
teacher 18:5,10 28:18 28:22,22 29:18 42:14 42:15 43:18 49:24,24 51:12 52:6 59:15,16 65:20 72:2 72:11 73:12 77:18 86:5 91:24 92:13 96:10,21
teachers 12:5,7,8 21:17 27:5,6,7 28:24 29:5 29:21,22,24 30:3,7,20 36:15,16 38:1,2,2,6,8 38:12 39:19 43:10,17 45:16,17,19 46:1 51:7 66:2,12,16 66:18,19 67:20 72:5,8 73:2,9,11 75:9,14,21 76:21 86:6
teaching 30:16 38:9 59:18
tears 70:5
technical 8:18
technology 13:4 78:21
tell 4:7 22:15 25:11 52:14 68:4,13 70:3 77:24 81:1 88:11
telling 55:1 85:6
tells 45:20
temporary 14:16
term 23:5
terrible 64:23
test 93:14
testimony 3:22 16:17 18:18 99:13
textbooks 22:6
thank 4:5 20:22 22:9 22:10 24:8,9 26:15,16 29:7 31:10 34:21 36:17 39:9 40:9 42:10,11 44:1,2 46:16 46:17 49:17 52:20,22 54:4,6 56:7 59:9,10 60:14 61:10 64:13 65:4,5 66:3 67:2,3 69:15,16 71:12,13 74:6 75:24 77:13 80:17 82:15,22 85:19 88:5 90:19,20 95:21 96:16 97:3,4 98:3 98:7
thankful 46:21
thanks 61:9 92:21 93:5
thatcher 33:7
thats 6:22 7:2,9 10:19 14:6 15:6 20:2 23:21 40:8 43:19 51:10 55:9 56:6 57:5 58:12 60:14 76:16 79:15 84:7 84:11,20 86:10,19 87:7 88:2,3 88:3,13 89:9 90:5,18 91:17
theatric 38:17
thered 59:2 66:6
theres 9:19 10:11 11:8 12:6 14:9 22:4 23:16,17 27:16,20 29:2 31:22 51:2,8,23 58:16 84:4 86:18,21 91:24 92:1 94:3
theyll 11:11 60:11
theyre 23:11,20 33:4 47:10 51:19 59:7 68:23 68:24 78:11 80:5,15 82:3 82:3 87:4,5 87:6 96:2
theyve 36:11 38:4 78:17
thing 23:3,15 27:4 45:14 50:24 59:3 68:16 80:18 82:4,6 84:12 87:16
things

7:11,16 9:8 12:20 40:2 44:20,21 45:9 66:1,1 70:17 76:9 77:23 80:16 84:9
think 4:7,24 9:1 21:3,12 23:16,21,23 24:1,5 35:10 35:14 37:8 44:12 45:9 45:11 46:4 49:20 50:8 51:15 52:2 54:1,3 56:11 56:15 57:5 58:12 66:9 69:14 70:12 72:24 73:22 73:23 75:1 77:7 82:5,8 82:9,10,11 83:10,15,18 83:19,20 84:12,13 89:23 90:12 91:14,23 92:6,22 96:12
thinking 91:21
third 8:17 12:19 14:11 52:13 95:4
thirdparty 23:24
thought 44:13 65:14
thoughts 16:12 30:4
threatened 9:17 81:7 89:10
three 5:14 17:8,14 18:24 28:2 34:18 36:24 47:21 50:3 54:24 79:3
throwing 40:6 58:9
thrown 58:2
ties 41:21
tim 1:14 4:9 16:1
time 8:6 16:14 17:2 17:4,13 18:13,13 21:6 27:17 27:22 29:4 31:19 34:6 35:16 43:13 49:21 53:18 58:9 59:19 63:19 68:8 69:9 70:14 71:10 79:3 80:1 82:7 83:4 84:21 84:23 86:22 87:6 88:2 95:19 98:11
timecards 16:13
timekeeper 16:12
timeline 50:8
times 17:2 19:18 29:9 52:19 64:2
today 19:7 20:7 25:6 61:21
told 50:23 54:15 72:16 80:17 92:15,18
tolerate 19:8
tonight 4:5,24 5:2,9 5:24 6:10 7:2 15:17,24 25:7 42:19 46:21,24 47:21 51:5 67:21 71:6
top 14:4 32:2
topic 62:21
toured 36:24
touring 70:1
tout 32:19
traditional 95:8
trained 73:10
training 46:8 95:17
transcript 99:10
transcripts 7:5
transferred 63:15
transformation 70:8
transforming 34:15
transition 14:1,10,19 15:14 22:5 25:18 28:12 29:1 44:14 46:11 54:4 66:12 72:7 80:12
transitions 14:14 27:16,22 29:3 78:14
transparency 31:23 84:6
transportation 62:10
trauma 81:10
traumatize 57:21
travel 7:23 76:24
treats 34:11
tremendously 22:18
trend 94:21
tried 15:10
tripling 27:19
true 41:8 86:19 99:9
truly 38:9
try 12:17 13:9 71:1,11 84:22 85:14
trying 49:19 50:3 63:7 84:3
tuesday 17:11
tuggle 2:17 44:7 49:15,16
turn 38:23 39:20,21 56:18 72:18 93:14
turned 38:14,15 60:14 96:5
turning 19:9
turnout 35:12
tuthorn 2:20 3:13 56:9 56:11 88:6,7
twice 61:18 79:20
twicegifted 39:4
twins 71:2
two 9:24 13:16 17:22 19:18 20:24 21:9 24:21 27:18 28:7 30:22 33:3 34:18 39:22 43:8,8 44:9,16 52:10,11 54:23 57:4 57:11,20 61:18 62:2 70:7 73:24 78:22 95:24 96:4
twoyear 36:1

U

u 19:16
ultimately 13:22
unable 19:4
unbelievable 20:1
underneath 11:20
underperfor... 18:19 62:24 75:20
understand 13:18,18,19 47:2 50:20 58:3,4,7 73:10 84:9 97:16
underutiliz... 33:16
underutilized 10:6 20:5 25:6 25:13 26:11 56:4 63:1 75:19 94:2 95:10
unethical 48:21
unfair 19:23,24 55:13 91:17
unfamiliar 42:3
unfortunately 66:8
uninviting 9:12
units 67:13,14,15
unrelated 63:1
upbringing 84:8,11
updated 10:15
upgraded 8:18 78:21 79:14
upgrading 13:3
upheaval 80:12
upper 44:9,10,19 45:9
upset 66:4 83:2 96:6
uptown 23:7,8 44:22 44:23 45:3,4
use 58:24
utilization 25:10 93:11
utilize 25:4 58:19
uttering 54:23

V

value 30:15 40:16 75:6
values 30:17
various 9:18
vehemently 45:12
vehicle 83:12
venue 47:24
verified 99:14
versus 91:1
viable 26:12
vickas 2:4 17:17 20:23,24 66:23
view 76:19
violation 34:13
violence 20:15
visit 65:13 69:24
visited 91:5
vital 93:5
vito 1:23 99:5
vocal 88:9
voice 61:24 64:13
voices 96:13
volunteers 92:22
vote 13:21 17:8 52:19
voulgaris 4:20
vulnerable 34:11

W

wait 58:19
waiting 64:19
walk 15:16 46:13,14 64:16
walked 31:2 43:9 44:17 54:14 59:24
walker 2:12 39:11,13 39:13
walking 23:6 68:21 88:16
wall 83:17
walls 13:8
want 7:15 8:13 16:9 16:23 17:1 22:4,5,6,7 22:23 23:15 24:20 29:8 29:16 30:6 39:3 46:7,8 46:8,13,14 48:11 50:7 52:3 53:11 53:22,23 56:13 57:3 60:21,22 69:11 70:3,6 70:9 73:21 77:11 80:15 80:16 82:21 83:18 85:1,4 85:6,7,16 86:9 89:7,19 90:12,17,24 97:8
wanted 35:6,9 46:22 49:22 50:23 53:9 57:23 91:12
wants 83:20 85:5,21
ward 59:7
wasnt 32:7 42:16 44:18 54:16 57:24 77:20
watched 67:7 69:8
way 8:8 9:9,10,12 15:5 20:1 26:8 27:21 28:6 29:10 35:21 37:10 51:23 60:15 68:7,15 69:3 70:17,18,19 82:10,12 84:1 89:24 90:1,9 96:14
ways 75:17 87:11
weaknesses 75:16
weave 38:8
web 72:19
website 6:11,19,21
websites 6:13
week 19:11 52:14
weigh 9:4
welcome 43:17 60:4 69:6
welcomed 59:24 92:4
welcoming 1:4 7:20 8:9 10:8 12:21 25:15 32:12 40:18 41:16 48:22 55:23 67:18 76:10 78:6 92:4
wellfunctio... 78:22
wellutilized 33:3
went 18:18 26:21 31:4 38:1 53:17 65:13 81:4
weve 4:22 7:11 8:5 10:23 11:19 15:10 44:17 45:15 51:17 74:14 79:4 84:14,16 85:15 90:17
whats 11:5 13:19 14:24 29:2 36:5 67:11 85:4 87:19
whereof 99:13
wheres 51:4
whistles 37:22
whos 7:1,3 52:5 55:14 68:21 76:19 80:22
wife 22:15 40:13
willing 46:6
wings 60:9
winninger 3:10 77:15 82:17,18,18

wish 96:8
witnessed 86:11
woman 60:1
wonderful 28:20 53:14 65:3
wondering 51:4,7 87:8
wont 33:10 71:3 91:16
word 7:1 67:11
worded 55:6
words 23:1 54:24
work 8:19 12:16 27:23 29:6 45:23 52:14 60:5,19,20 66:11,22 86:5 92:21
worked 4:22 31:4,4 46:3 87:15
workers 7:22
working 9:6,13 13:17 30:10,18 50:2 68:1 86:16 87:5
works 38:11
world 20:10 66:6,8
worried 18:11
worry 66:20 68:20,22
worse 88:14
wreak 36:13
wrigley 70:22
write 49:20 50:1
writing 83:17
written 16:16 29:21 34:23 49:12
wrong 77:4 80:10 83:14

X

xylophone 65:20

Y

yall 53:18
yard 67:14
yeah 71:20 88:23
year 18:20 32:10 34:15 49:24 50:18 61:18 62:7 78:8,10 93:16 97:19
years 10:24 25:5,13 27:24 28:2,7 30:22 36:23 42:2,9 43:8 43:19 46:3 52:9,10,11 59:17 61:3 64:3 67:6,6 67:18 69:3 79:3,4 86:4 86:21 92:8 92:18 96:2,4 97:24
yogurt 70:5,6
youll 6:21 10:2 92:6
young 71:2
younger 55:14,17 81:22 81:24
youre 21:23 27:3,18 34:3 50:4 55:12,18 56:4,20 57:20 58:14 59:3 68:11 87:20 90:16 91:10,24 97:23 98:1

Z

0

00 5:13 17:11,12
000 5:22 10:23,23 68:19,19 73:13
084004642 1:24

1

1 17:16 26:21 32:7 78:8 96:1
10 17:12 39:10
100 27:9,15 42:9 47:6 48:7,8 49:3 59:22 66:17 96:2
11 39:11 69:1
11th 1:8
12 39:11 58:22 59:1
125 5:12
12th 99:14
13 44:6 49:24 52:9
130 47:12
14 44:6
15 10:23 44:7 52:4
150 19:10
16 52:23
16th 5:11 17:11
17 2:3 52:23 54:7
18 52:24 54:8
19 56:8
1993 59:19
19th 4:20 11:24
1st 28:21 74:10

2

2 16:11 17:16 26:20,21 27:1 78:7,7 78:10
20 2:4 5:22 56:9 59:17 61:3
200 58:18
2000s 93:12
200s 64:20
2012 54:19
2013 1:9 54:21 99:15
20something 86:21
21 56:9
21st 13:7
22 2:5
22nd 13:21
23 86:3
24 2:6
25 32:2 69:17 85:6,8 89:19 89:20
26 2:7 69:18 89:20 98:4
26th 12:24
27 74:8
28 28:18 85:16
29 2:8 74:8
2andahalf 54:12,15 55:15
2nd 18:20 28:22

3

3 17:17 78:10,24
30 1:10,11 4:3 17:5 41:11 57:17 69:1,1 71:22,23 77:14 85:7,8 85:16 89:19 97:13,20 98:5,6
300 68:19
30th 92:14
31 2:9 82:16
33 57:17
35 2:10
36 2:11
37 18:9
39 2:12
3andahalf 28:9
3rd 13:5
3yearold 61:15

4

4 24:10 28:14
40 2:13
400 68:19
41 63:20
42 2:14
44 2:15
4420 1:4
46 2:16
475 80:14
49 2:17
4h 84:21
4th 82:19

5

5 24:10 97:5
50 47:13 67:6,6 67:18 69:3
53 2:18
54 2:19
56 2:20
59 2:21
5th 77:18

6

6 24:11 58:22,22 90:12
61 2:22
65 2:23 73:13
66 2:24
67 3:3
69 3:4
6th 81:4

7

7 1:10 4:3 31:12
70 97:14,20
71 3:5
72 37:20
74 3:6
75 95:2
76 3:7
77 3:8
7th 81:5,23

8

8 5:13 17:11 31:12 79:1
80 3:9
800plus 72:13
800s 64:20
82 3:10
84 3:11
85 3:12
88 3:13
8th 13:6 17:9 81:6
8ths 30:2

9

9 1:11 17:5 31:13 69:1 98:4,5,6
90 3:14 52:14
90s 43:2
92 3:15
94 90:13,15
95 3:16
96 3:17
97 3:18

CHICAGO PUBLIC SCHOOLS | CPS

125 South Clark Street • Chicago, Illinois 60603 • Phone: 773.553.1550 • Fax: 773.553.1502

Community Meeting for the Proposal to Close Joseph Stockton Elementary and relocate Courtenay Elementary to 4220 N Beacon St.

April 11, 2013; 7:30-9:30

Location: Amundsen High School, 5100 N Damen Avenue

CPS Facilitators:

Tim Cawley, Chief Administrative Officer
Sebastian De Longeaux, Chief Procurement Officer

Also in Attendance:

Craig Benes, Chief of Elementary Schools, Ravenswood Ridge Network
Phil Salemi, Deputy Chief of Elementary Schools, Ravenswood Ridge Network
Luis Garcia-Juarez, School Council Relations
Aldermann James Cappleman, 46th Ward

Brief Summary

The purpose of the meeting was to receive public comments on the proposal to close Stockton Elementary School and relocate Courtenay Elementary School to 4220 N Beacon St. in accordance with Public Act 097-0474. CPS officials reviewed the proposed action. There were about 70 community members in attendance and 38 speakers. The speaker comments focused on a variety of topics including: the Courtenay community's capacity for the change and their desire to partner with and work together with the Stockton community, maintaining Courtenay's lottery status, and transition plans.

CPS Welcome

Tim Cawley, Chief Administrative Officer, welcomed those in attendance and introduced the meeting. He introduced the sign language interpreters and Spanish translators. He asked if anyone required Spanish translation. One attendee raised a hand, the translator moved to sit next to the person who had requested translation. Cawley then presented an overview of the proposal and reviewed the materials available to meeting attendees. Sebastian De Longeaux, Chief Procurement Officer then explained the meeting rules and procedures. The meeting was opened for public comment at about 7:45pm.

Public Comment

Natasia Lopez, Parent of two Students at Courtenay

Ms. Lopez said that she chose to send her children to Courtenay because of a negative experience at a neighborhood school despite having some good teachers and a good principal. She said the classrooms were overcrowded and her child struggled to hear. She said she was concerned about safety. She said that as a single Hispanic mother, she knows how few options there are for education and what the odds are against her and her children. She said magnet schools give them options. She said poor and minority children show two times the improvement in small class settings. She said that kids need stability in their schools and adult to

keep them safe. She concluded by asking how we can succeed in school when doors to opportunities are closed.

Cassandra Vickas, Parent of two students at Courtenay
Ms. Vickas said that she thinks this is not a bad plan. She thinks it is a good plan. She said that CPS is in a budget crisis and has known for a long time that Courtenay could be on a list because it is small. She said that Courtenay now can take a good school model to Stockton and help to make Stockton better. She said it relies on parents, teachers, administration and students, she said a school is not a building, but that people make a school and this is the kind of challenge they can accept. She said she would like to hold CPS accountable to ensure they support the transition. If the communities sacrifice and take the challenge they do not want to be left hanging. She said they don't want to hear about a fund, they want to see it and see the investments.

Gene DeRamos, Parent of a Student at Courtenay
Mr. DeRamos said he rises in favor of the proposal as it stands. He said that he and his wife came to the conclusion with some level of anxiety as they are tremendously satisfied with their current circumstance: 1st class academics, safety, no bullying. He said they want to see those things preserved. He said whatever comes out of the new entity has to have the ability to be a 1st class school in the near term. He said there is great potential and great risk. He has seen that the synergies from mergers can be very elusive and don't materialize unless they are made to happen. He said a third party has to be involved and that the network must have a formal level of accountability and be an equal partner and invested in success just as the parents are. He said that if those conditions are there, then success can be had.

John Humpherys, Parent of a Student at Courtenay
Mr. Humphreys said he is an attorney and parent of a Courtenay student. He said he is generally supportive of more efficient schools and better opportunities. He said there are two impediments to success, first that in eight years if the Stockton boundary does not have enough children to utilized the building, then they will be back in the same situation after Courtenay students graduate out. Next he said the CPS proposal calls Courtenay welcoming but is truly closing Courtenay without granting procedural rights. He said that he thinks Courtenay ceases to be Courtenay, loses its building, and becomes a neighborhood school. He said CPS is denying the process and benefits for schools under consideration for closure. He said Courtenay does not fit with the CPS model for closure, that it is high performing and not underutilized. He said there are viable solutions to keep Courtenay a lottery school.

Melanie Bienemann, Parent of a Student at Courtenay
Ms. Bienemann said she is a proud parent of CPS Courtenay Elementary School student. She said that Courtenay is a level 2 school by CPS standards; it went to a 2 from a 1 during reconfiguration of standards.She said that what is being proposedcloses Courtenay. She said Courtenay has great teachers, good leadership and is small school so there should be 100% open enrollment and no boundaries. She said parents embrace diversity; parents want to choose remain 100% lottery to be successful; she said there are too many transitions. Courtenay can't

be successful as they combine, double their size, and hire new principal; she said this process is rushed, it can't have integrity.She stated that when she worked at Lurie's Children's hospital there was a moving plan that took five years to construct; the procedural changes were made 3 years in advance and 6 months before and after the move there were no changes. She said her daughter had a challenging PK experience and Courtenay loves her daughter. The administration loves her. She is doing wonderful; she knows her 1st grade teacher. She said the school can't be prepared to move forward with there being so many transitions in short period of time; she suggested CPS keep the Courtenay model intact so teachers and students are allowed to do their best work.

> ***Tim Cawley*** *– The only way Courtenay name will change is if Courtenay Local School Council (LSC) chooses to change the name. No one else can do that. Only body that has power to change name is the LSC.*

Cynthia Heywood, Teacher at Courtenay and LSC member at Courtenay
Ms. Heywood read a statement written by Courtenay teachers, to the Stockton teachers and then added a few comments:

> "Dear Stockton Teachers: In light of the proposed situation and after feedback from April 8th's community meeting, we the Courtenay teachers feel it is important for you to know our thoughts feelings. In event that our schools merge, we want you to know that we hold your staff in high regard. We know there are great teachers at Stockton. This proposed merger would be very difficult without you and we look forward to working together for the good of our new school. Our goal is to make the new school the best school it can be and that it is structured to meet the needs of all our future students. We, like you, value high quality teaching and small class sizes. We plan to find an administration that values that as well. We look forward to meeting and working with you in the near future."

She ended on a personal note, stating that Courtenay has only been a lottery school for 2 years, perhaps as a strategy to keep open because enrollment has been small as long as she has been at Courtenay. She said previously Courtenay took everyone who walked in door. There was high expectation for students; students worked hard, and teachers worked hard. Success had nothing to do with the building or lottery. She said a school is not a building, a school is community. She closed by saying that we believe we can be a community with the people currently at Stockton.

Mila Cohen, Mother of Student at Courtenay
Ms. Cohenis the mother of a special needs student at Courtenay. She said she opposed the proposal and said that the mayor says the time for negotiation is over but there has been no negotiation, dialogue or transparency. She asked if Courtenay was ever on a closing list; and why should it be? She said it is one of the top 25 schools, the second most promising school. She said there is a high percent of low-income students and the only reason the school is not Level 1 is that there was no significant movement – she said using that logic CPS would downgrade Harvard for not improving. She said relocation, and welcoming schools are all euphemisms. She said by destroying everything that makes Courtenay, they are being punished for success.

The Mayor and CEO who tout choice are contradictory. She explained that the only rational explanation is that the school is real estate for developers; the rationale is not ethical. She said CPS is cramming together students, selling public land, and putting charters in the area. She said even Margaret Thatcher would not do this. She said she is concerned because charters do not take special education students because they are not profitable. She said he daughter is safe and happy. She concluded by saying that society judges how people treat the most vulnerable, and for CPS it is not good.

Megan Cusick, CPS Parent
Ms. Cusick said she is a CPS parent, and member of a neighborhood school organization in Rogers Park, and also a member of the organization of Northside Save our Schools. She spoke to procedural concerns, and had no intention to speak until she heard Mr. Cawley at an earlier meeting talking about there was a large turnout for this meeting; not so much for earlier meeting. Mr. Cawley commented on that. She said she acknowledgedthe fact that the Mayor said time for negotiations is over. He just closed the door on parents; this makes this process a sham. She mentioned stability and doing what is best for children; and this has to be done in a few months; and we know kids need more stability. She said Mr. Cawley got a 2-year reprieve because his daughter needed stability in schooling. She said Mr. Cawley appreciates what these children need what is good enough for his child should be good enough for these communities as well. As far as the partnership with the Chicago Police Department (CPD) she commended CPD for stepping up, saying it is a difficult job because it will wreak havoc; this partnership should be with parents, teachers, and students.

Kandalyn Hahn, Parent of a Student at Courtenay
Ms. Hahn said she is a parent of a Courtenay student and spent 4 years looking at schools for her son. She toured three dozen schools, maybe more, she lost count. When she saw Courtenay, she saw something special: small classrooms, low numbers, it was more than nice. With other schools there will be too much noise; she said one can't think much less learn. She said even before lottery status parents were making active choices that parents cared enough to drive to do better for their kids. She said parents chose to go to school without bells and whistles , and no auditorium, gym, full time music, or specialty teachers. She said many who chose Courtenaydid sobecause of the culture they created. She said teachers are not overwhelmed by classrooms that are too big. She said she turned down a gifted program and Agassiz which has dance, language, and a nice building. She said she knows what is important, that kids were focused at Courtenay and would be supported to learn. She said to turn Courtenay into a neighborhood would make it lose what is special. She asked what would it be like if you don't want to give commitment to parents like her; and answered her own question by saying we'll do what we have to do for our kids and CPS may lose us for good.

Stacy Walker, Parent of Students at Courtenay
Ms. Walker said her children attend Courtenay and she proposes that they go to Stockton because our kids deserve a better facility, and our kids can go to a better facility and our teachers go to help students; she said to embrace Stockton not to turn away, that two heads are better than one. She said better we go to help all children perform at higher level because no

child should be left behind. She said every child deserves a better education; don't want to throw away our future and children are our future.

Alonzo Rivas, Parent of a Student at Courtenay
Mr. Rivas and his wife chose Courtenay over schools that were arguably better. They saw the value of educational model, diversity and that the administration and staff were welcoming and fostered parent involvement in education. He said he thought after hearing the subsequent debate about merging both student populations that the merger will not benefit Courtenay or Stockton students. First, he does not believe the district can keep low class size as the hallmark of both schools as it has been representing. He said that given the fact both schools have sizeable sped populations above 30% that require lower class sizes. He said even though the district stated only Stockton is closing, and that Courtenay will become a welcoming school, but CPS's plan in effect is closing both schools. Courtenay will cease to exist. Administration and staff at current school will be replaced so the staff unfamiliar with community. He said these are the reasons he is opposed to merger. He supportsthe move for keeping Courtenay model and to keep it as 100% lottery school.

Lindsay Annunzio, Teacher at Courtenay, Teacher LSC chair
Ms. Annunziosaid she is a middle school science at Courtenay and the LSC teacher chair. She said she wasn't here on Monday, and she feels that the culture was misrepresented. She said Courtenay has a long history of educating all children; Courtenay was the first to use inclusion education and make special education a high priority; it was the first school in CPS to educate HIV positive children; when students succeeded at Courtenay they attended other schools in CPS. She said the lottery is new, up until 2 years ago students just walked in door. She said that staff loved and nurturedevery child that did [walk in the door]. Even though the school was not lottery that goal was still achieved. She said to please know that if the merger takes place, children, parents, and teachers will be welcomed. She said she plans on doing what she has been doing: providing ahigh quality education to all students no matter the building. She closed by saying "I am good at what I do, no matter who I teach."

Alderman Capplemanjoined the meeting.

Corina Chou, Parent of a Student at Courtenay
Ms. Chou said she has two upper grade students and that a lot of upper grade parents heard commotion after Monday. She said many are invested in getting a transition plan in place. She said she has two high performingstudents and when she walked into Courtenay, the school wasn't lottery school. She said she didn't know if it is lottery in upper grades. She said shefindsthe whole thing disturbing; she lives in Uptown; she knows Uptown inside and out and she knows the Stockton area. She does not like the attacks she has heard on the neighborhood she said those attacks make her a bad parent. She asked the question why would I choose to live in Uptown? She said there is phenomenal potential with Alderman and a diverse and integratedcommunity. She said there is phenomenal leadership, teachers, and parents at Courtenay and she is sure Stockton has same. She said when my teachers and leadership tell me this is going to be challenging but glass half full we can make best of it, we will make the new

schools phenomenal. She said she has faith in the new school's new teachers and new administration. She said we would like to see investment from CPS. She said we're willing to come in; we want to come; we want training. She said all of the meetingsare just holding us up at this point. She said she has kids who need to go to new building and she doesn't want them to walk to hostile environmentshe wants them to walk to the best place.

Brad Reed, Parent of a Student at Courtenay
Mr. Reed says he appreciates the opportunity to speak, and is thankful for all Courtenay parents and those who couldn't be there who entrusted him to deliver community message. He said it is important to know and understand that the majority of Courtenay parents are concerned with the proposal. He said numerous parents representing all grades totaling 130 peoplehave signed a petition. He said many Courtenay parents are concerned over the absence of an initial forum to discuss the action. In addition this could have served as venue for other options such as STEM (Science, Technology, Engineering and Mathematics), or magnet IB. He asked why Courtenay istheonly school in action proposals that incorporates a change to enrolment policy. He suggested moving the school but changing it to 100% lottery. He said parents of Courtenay want to remove Courtenay from the proposed action due to not meeting criteria combined with absence of a forum to discuss the proposal. He said it is unethicalto call it "welcoming" when it will absorb a building, community, and enrolment model. He said if a merger must happen, and it looks like it will, to expand the model to maintain lottery without boundaries. He said this is proven and effective; Courtenay is most successful as school of neighborhoods not a neighborhoodschool.

LarrenTuggle, Parent of Student at Courtenay
Mr. Tugglesaid he is a proud dad of a Courtenay student. He has been a CPS teacher for 13 years. He said he stayed up all night trying to write something but like many colleagues he was working on grades for last threedays. He said he wanted to talk to the idea of what he thinks is the timeline. His son was accepted into Peirceand then they heard from Courtenay, which sounded like special place so they chose to go there and passed on Peirce. He said the lottery was in December and then in CPS made announcements regarding schools consolidations and then parents were asked if they wanted to fill out a second lottery, which they did, but when theyfilled out there were a lot of schools missing, where is due process, he asked. He said that criminals get due process and asked, do teachers, students, parents? He said they were promised opportunity to be at higher functioning schools. He heard that promise before, it was NCLB (No Child Left Behind) and that that didn't happen. Mr. Tuggle said he is good at what he does, he is a Golden Apple winner and has had success for 13 years, but he has had five different administrations in two years; he said CPS is in the third iteration of the people runningSIG grants. He said he can work 90 hours a week but given those movementsthere would still be chaos; it is hard to do job well. His final comment was "Vote for stability. "

Lavera Lee, current LSC chair of Stockton
Ms. Lee said her biggest concern is around special educationchildren and the services they receive at Stockton, like the Snoozlen room. She said some of the parents who have special education children are really concerned. She said she is against any closings in Chicago. She said that since we have had to come together she has listened to people say "neighborhood

school" like they were spitting. She said Stockton is a wonderful school. She sent all of her children to Stockton. My oldest is an engineer. She said it is not the area. It's what a school does with children. She said that if this is going to happen, we want it to be as smooth as possible for the kids. She said all of this politics and the kids are being lost. She said to think about their feelings and make the transition as smooth as possible.

Anne Cuddy
Was called to speak and did not address the meeting

Melisa Rakanovic, Parent of a Student at Courtenay
Ms. Rakanovic is the parent of a high functioning child with autism. She said they missed the opportunity to participate in early intervention and she went to the neighborhood school to initiate the IEP; she said the school did not accept her child because they were full. In February of 2013, her child was placed at Courtenay. She said when his IEP was written he was uttering 2-3 words in phrases and now he is talking. She said she is against school closing period. She said to invest in education; she does not agree with proposals because of the wording. Stockton is not being closed; Courtenay is. Regardless, she said they should be proposing to expand resources and funding to higher performing schools to Stockton instead of a merger. She said that the deficit needs to be figured out; it is not for the kids benefit that CPS is doing this. She said she does not want to lose Courtenay. She does not agree with converting Courtenay to a neighborhood school.

KetiTuthorn, Parent of Student at Courtenay
Ms. Tuthornsaid she wanted to clear up misconceptions; she said when parents talk about Courtenay's lottery they are most concernedabout being confined to a neighborhood. She said she has a son going to Courtenay and said that if the school becomes a neighborhood school then her second child would probably not get it. She said when we talk about lottery that is what we're talking about; equalopportunity for all children. She said everyone is concerned regardingclass size and that Courtenay and Stockton pride themselveson using discretionary funds to keep size down; they are committed to small class size. She asked ifStockton with 33% and Courtenay 30% special education how is it possible to accommodate all these people. She said we don't need to traumatize them all over again. She said she understands money, she is not stupid. She suggested doing change slowly over time. She said an alternative is to expand Courtenay, that there are empty buildings and CPS should let Courtenay into an empty building then let in the 200 children on wait list. She said Disney II is getting funding to expand, how come they are getting funding, can't CPS send money to Courtenay to the school can grow PK to 12. She said people will leave and go to private schools or the suburbs.

Kerry Martin, Special Education Teacher at Courtenay
Ms. Martin said she came to talk to people here. She has been a special education teacher at Courtenay for 20 years. In 1993 Courtenay started to bring in general education students because previously we had been 100% special education. She said Courtenay has always been a diverse community both academically and culturally. The school was named after woman at

forefront of free and appropriate education for all. She said she personally welcomes theopportunity to work with the Stockton community and sees this as chance to grow professionally. She said they can develop a stronger professional community to increase collaboration and to stretch their wings, that it is a great opportunity for kids and families, they will have more space to grow access to better facility and larger community of friends. She said she looks at it like this:Stockton needs kids and Courtenay has some. Courtenay needs a building and Stockton has a beautiful one. She said let's make this work. She said she was on the picket line with the teachers. She does not want to see any schools close. She said she does not want parents and children to be stressed out. Both Courtenay and Stockton will survive. "Let's make it the best darn school in the city!" She said like others, she still has questions, after 20 years a superior rating, NBCT (National Board Certified Teacher) and masters'degree plus, she feels she still doesn't have the job security she is looking for. She said she finds comfort in knowing if she keeps her personal high professional expectations for herself, she will be okay and so will you.

Christine Clark, Parent of a Student at Courtenay
Ms. Clark said that when the new Courtenay becomes the best school in city her 3 year old son won't attend because we don't live in boundary. She said her neighborhood school Principalhas been removed twice. She said she does not know what she is going to do with her son. She then read on behalf of Ameli Jacobi: Ms. Jacobi wrote that her voice is in opposition of moving Courtenay to Stockton. She wrote of challenging family circumstances including a change of residency and the need to spend large amounts of time on public transportation get to school , but she do it because she loves Courtenay. She wrote that her children do well academically. She said the idea was sold in a manner that benefited Stockton and was a disservice to parents and kids. She wrote that safety is a large concern. She wrote that CPS guidelines state that no child will be transferred to lower ranking school and this is not accurate with the Courtenay/Stockton proposal. She concluded by writing that children are not responsible for lack of planning by the Board of Education. She closed asking listeners to reconsiderthe effects on decision livesof children of Chicago.

SP, Student at Courtenay
SP said she was first afraid of movingto Stockton because she didn't know anyone and didn't know if they would be nice. She said she went to visitand felt okay, she thought the school was really big – there was a gym, music room,auditorium and lockers. She said she met some of the kids when playing basketball. She said they were nice, and let her shoot some hoops with them. The music teacher let her play xylophone; she was friendly nice let her go on the stage in auditorium. SP said she is excited to move to Stockton because Courtenay doesn't have all of these things. She is so excited to make new friends and meet new teachers.

Romana Puente Parent of a Student at Courtenay
Ms. Puente said she knows people are upset. She said CPS is proposing these schools and move. She said in a perfect world CPS should keep all schools open. She said this is not a perfect world. She said we are losing sight what matters most – students. She said we should work together with teachers to make the transition as easy as possible for kids. She said Stockton is an

amazingschool, building and thatteachers, staff andparentsare all a pleasure to meet. She said she has faith in teachers and students, and that parents have nothing to worry about. She said the schools separately are amazingand to imagineand what we can do together.

Tamiye Meehan, Stockton Community Resident
Ms. Meehan said she has lived on DoverStreet for the last 50 years and watched Stockton grow from a small to school to a school loaded withmobile units. She said Dover street neighborhoods are welcoming the changes. She said listening to Courtenayteachers she is impressed. She said Stockton will benefit from the combination and Courtenay will too. For last several months theDover Street neighbors have been working with the library and are impressed with the quality of materials in library. She said there is not sufficient staff to keep open and center for reading for children of Courtenay or Stockton. She says there needs to be a full-fledged ALA accredited librarian as well as aides. She said neighborhood condos go for $300-400kso people don't need to worry about who is walking down street. She said what you might have to worry about are coyotes between 9:30 and 11:30 at night. She said the neighborhood came a long way in 50 years and she is looking forward to retiringsafely in hercommunity. She said, welcome Courtenay. She says she looks forward to what they will do and to a school that they can market as great to the neighborhood.

Patrick Lyman, Parent of a Student at Courtenay
Mr. Lyman said his daughter had started in neighborhood school, it was fine, however, when they got the opportunity go visitCourtenayhe immediately saw that it was a special place. He said within two days of being at Courtenay his daughter was transformed – she was engaged and happ and told her parents she was much happier there. He said everyone's stories share that Courtenay is a very special place. He said we all want to be hopeful about change but it is hard not to be cynical aboutthe announcement at the last minute. He said Courtenay doesn't meet criteria, and that it is like putting the Cardinalsname at Wrigley Field. He said his request is they maintain the lottery program, maintain what is special about Courtenay. He said he has young twins who will be affected, and won't be able to attend Courtenay with their sister. He asked to do take time to consider maintaining what makes Courtenay special.

Brooke Gard, Parent of a Student at Courtenay
Ms. Gard said she is here to read on behalf of parent **Dawn Kirsschman** who couldn't attend. Ms. Kirsschman's letter expressed concern regarding special education students and asked about the impact on populations that were each 30% special education. She said that students need structure and consistency and that when students move classrooms that teachers take months to prepare them for such transitions. She questioned much larger transitions to a new building with new people. She wrote that it is a humanitarian issue. She said many children cannot return to their neighborhood schools that maybe they were forced out or the schools simply couldn't help special education students because of resources. She asked what betterplace than one where the administration and teachers trained and care. She wrote that she thinks Stockton as lot to offer. Shethink Courtenay has a lot to offer. My problem is not with putting two together it's about theprocess and how parents were informed. She said they are feeling like we made choice to attend a school and that choice is being take way.

TarynKurth, Parent of a Student at Courtenay
Ms. Kurth said she supportsrelocation. She chose Courtenay because it small and intimate and had strong academics. She said they have an exceptional faculty and administration dedicated to children. She said amenitiesare not possible in the current building. She does not think education will be diluted because of a different building; there will be additional experiences available. Small class sizes support inclusion and shows respect for all students. She said Courtenay and Stockton share in common that studentsare admitted blindly, teachers are exceptional at assessing strengths and weakness of all students. She said Stocktonis proposed to close as underutilized; she met teachers and hope many can come in as part of the Courtenay community.

Jesus Gonzalez, Parent of a Student at Stockton
Mr. Gonzalez spoke at the last meeting. He had an opportunity to meet people from Courtenay, some of the administration. He said they were very nice people and heard both sides pro and con. He said one of the things he is against is that they call it a welcoming school; really it is not for Stockton it is a takeover for the Stockton building. He said he spoke with several Stockton parents and the people he spoke withare all against it including most of Latino community. He said the neighborhood school doesn't speak very well about it. He has a stepdaughter at Lakeview HS honor classes, very good teachers; he doesn't see what is negative in a neighborhood school. He said he travels from Logan square to CPS because Stockton is a good school. He said nothing is wrong withneighborhoodschools; if a takeover will happen, the administration from both schoolswill have to be more open to parents. To hear parents who are concerned. He said whatever happens he is still against it but he wants the best for hischild.

Derek Bridges, Teacher at Stockton
Mr. Bridges said he is a teacher at Stockton and he teaches 5th grade. He said he spoke on Monday and once again, wasn't planning on speaking.He said he heard a lot of people say a lot about Courtenay. He said not many talk about what Stocktonstudents get. He asked what the benefits are for my children.He said Stockton was level 2 last year. He said there are no gangs and they already have prekindergarten. He said Stockton students are in the same neighborhood and they already have Air Conditioning and aLibrary, two technology labs, and iPads. He said In three years CPS has hadfive CEOS who don't fulfill promises. He said his students have bigger concerns than iPads. He talked about the principal selection process and said Stockton has two times the students but Courtenay choosesthe Principal. He said the joint LSC meting assured attendees that they would represent both schools, but some parents said their LSC doesn't listen to them –he asked if they don't listen to their own parents, how will they listen to Stockton parents. He said he does no see a single benefit to Stockton students.He said that is closures are about finances, teachers and students did not create the financial mess and that if CPS can't figure it out to find someone better with finances to run the district.

Maria Galicia, Parent of a Student at Courtenay
Ms.Galica told a story about her son. They lived a blockaway from school that only went to 6th grade. There was a middle school and they moved him there. While there, a child threatened her

son with a knife. Maria said she took him out and moved him to Courtenay. He had a lot of trauma and depression from what he wentthrough at school. She said she didn't have any doubts about moving another son to Courtenay. She said at Courtenay, her son who was depressed improved quickly and now he gets As and Bs. Ms. Galica would like the school to remain on the same site, now her younger son will be in 7th grade. She is afraid her younger son would be at the new building. She said Stockton students see Courtenay students like they invading and she fears they will do something to her son. Maria said the other thing is we're looked at as intruders by the Mayor; butit is easier for him to move out of way than for us to move our school.

Pete Winninger, Parent of a Student at Courtenay
Mr. Winningerhas a son in fourth grade at Courtenay. He wanted to say publically, thank you, Courtenay is an amazing community and such a good home for his son. I'm sure Stockton has been good home for their children as well, he is upset about fact that CPS has not given time to integrate the communities together. He said had he talked with Stockton parents earlier that he hears theirconcerns, similar concerns, if we could met with them in orderly fashion his reservations would be lifted. He hasn't seen a vehicle for this. He said your [facilitators] jobs are funded by my tax money, my real estate. He said the writing is on the wallthat this has to happen and he wants it to happen positively as no one wants a riot. He said to let us merge i a way that makes sense as humans not as corporate interests. He said no one knows the "why", and that he doesn't care about or expect transparency. He said they need to be given a chance to transition and the most important investment is our kids.

Melanie Biememann
Ms. Biememann said she is not elitist; she is not against Stockton people. She said she has read the story, and it is anamazing story. And we all want what is best for our kids. She said we want small class sizes, 25, not 30. She said Courtenay has small class size because they can't fit more kids in room. She said we have to keep using discretionary funds but CPS will shut us down the effort becauseCPS wants us to have 28 -30. She said we can't have those numbers and have successful schools

Symantha Lancaster, ESP Stockton
Ms. Lancaster said she was sorry if you noticed her doing outbursts because as a parent of a special child and employee of CPS for 23 years she has some ideas she wants to share. She said she witnessed a shooting in front of the Child Parent Center (CPC), a person who was not a part of gang, brought a child to CPS and was shot out front of school. She said there are still problems. She said this happens everywhere. She said Courtenay is miles way and that she is sure it is beautiful. She said Tammy [Courtenay AP], is a sweet person, and they worked together when at Stockton. She said the main thing is that kids are coming to a new area. She is concerned about safety.

KetiTuthorn, Parent of a Student at Courtenay
Ms. Tuthorn said that she was glad safety was brought up. When she keepshearing about safety planit does not make her feel better, it makes her feel worse. She asked what will childrenwalkthrough such that we need plan. She said there is no safety plan at Courtenay; thatis

a big change. She said the police can only do so much. She asked why can't we expand Courtenay and put it in a safe neighborhood. She said people from Stockton can send their children to Courtenay as could people from all across Chicago. She said she is not saying that she doesn't want kids to go to Stockton, but that anoption for all of Chicago isthreatened to be taken away. She asked why don't we have schools like Courtenay in safe neighborhoods that can be large and keep class sizes smaller at 25, 26 we can compromise we can meet half way. She said things are moving too fast.

MelisaRakanovic
Ms. Rakanovic said she has reservations about returning to Kilmer, her neighborhood school. She said she visited and did not like the administration. She asked why is Courtenay being closed, why can't funding be given to Courtenay. She said when I say neighborhood I think boundaries. If this goes through my other child won't attend same school as her bother. She said that her family cannot pick up and move. She said, as a Stockton teacher said, there is no benefit to just renaming Stockton Courtenay and there is going to be dire impact on community on the whole. She said she does not think CPS will see the school repeat the performance that Courtenay has shown.

Claudia Pesenti, Teacher at Stockton
Ms. Pesenti she said she is a teacher at Stockton until June 30th when Stockton will cease to exist as a Board of Education person told her. She said she was in Stockton library until Derek told her in June that the library would be closedand she wouldn't be the librarian; the library opened in Feb. or March. She read a research brief on school closures that found that when a facility shuts down are children displaced, and communities lose vital resources. Says that current round of closures CPS stated that it was not closing on performance but utilization of the facility. However throughout 2000s the justification for CPS was using standard test scores. She said there is a relation because closure and charters. She said CPS and charter school operators claim closures have nothing to do with charters and that CPS will not repurpose buildings into charters. She said chartersare funded withpublic money and privately operated by for –profits or non-profits removed from public decision makingprocesses. She said CPS has plans to expand charter system which creates conditions under which traditional neighborhood schools are underutilized. She said the people in charge of CPS are supporters ofcharter school expansion.

Melanie Bienemann, Parent of a Student at Courtenay
Ms. Bienemann said she has two propositions 1. How about CPS rent us the Courtenay building for 1 dollar of the next 100 years, then we can make our own charter. Then she said she better not hear the building was turned intoa charterschool or she will be upset.

9:21pm
Alderman Cappleman
Alderman Cappleman said he wished he had arrived earlier however he was at another event. He said he is a former teacher and this is a sad sad moment. He said he doesn't know the answers. He appreciates hearing your voices. He said he will stand with you in any way he can to make

sure your children get the education they deserve. He said he has been very outspoken about hisstance and as a former teacher he does not support charter schools.

Melanie Bienemann, Parent of a Student at Courtenay
Ms. Bienemann said why can't we have a compromise where 30% neighborhood 70% lottery? She asked has anyone proposed something like Courtenay and Stocktoncome together and have 30% neighborhood and 70% lottery? She said another speaker said relying on neighborhoodwon't work as the neighborhood is too small and we will have the same problem in 8 years.

Tim Cawley thanked attendees for their comments and participation and closed the meeting at 9:30pm.

CHICAGO PUBLIC SCHOOLS
Public Hearing to Consider:
Proposed Closure of Joseph Stockton Elementary School and Relocation of Mary E Courtenay Elementary Language Arts Center
Statement of Benjamin Felton, Portfolio Planner
April 16, 2013

Good evening, Your Honor. My name is Benjamin Felton, and I am a Portfolio Planner for the Chicago Public Schools. I have been in this position since July of 2012. As a Portfolio Planner, I manage strategic planning to improve the efficient utilization of CPS facilities. Prior to becoming a Portfolio Planner, I worked as a teacher at CPS. I then joined the Tennessee Department of Education, where I focused on teacher and principal recruitment and contributed to the development of the department's five-year strategic plan. I have a Bachelor of Science from Vanderbilt University.

I have been asked to appear at this hearing today to convey to you, the parents and the community, as well as interested members of the public in attendance, information regarding the space utilization of the Stockton facility with respect to the proposal to close Stockton.

According to the Chief Executive Officer's Guidelines for the 2012-2013 school year, the CEO may propose to close a school if it is underutilized based on CPS Space Utilization Standards and student enrollment numbers recorded on the 20th attendance day for the 2012-2013 school year. The CEO may only propose a closure if the impacted students have the option to enroll in a higher performing school and the resulting space utilization after the closure will not exceed the facility's enrollment efficiency range as defined by the CPS Space Utilization Standards. I will discuss the details regarding the space utilization of this proposal, while my colleague Craig Benes, will discuss the performance of the welcoming school and highlight the supports being offered in the draft transition plan.

Stockton is currently located at 4420 North Beacon Street. Stockton is an elementary school that, as of the 20th day of attendance for the 2012-2013 school year, serves 475 students in pre-kindergarten through 8th grades.

To understand the enrollment efficiency range of a facility, Chicago Public Schools utilizes its Space Utilization Standards, which are located in your binder at tab B14.

The enrollment efficiency range is plus or minus 20% of the facility's ideal enrollment. For elementary school buildings, the ideal enrollment is defined as the number of allotted homerooms multiplied by 30. The number of allotted homeroom classrooms is approximately 76%-77% of the total classrooms available. As an elementary school's enrollment increases above the efficiency range, a school may be considered overcrowded as programming options are reduced or compromised. As an elementary school's enrollment decreases below the efficiency range, a school may be considered underutilized as classrooms are unused or poorly programmed, making the use of limited resources less effective.

A typical elementary school building has a total of 39 classrooms. Therefore, the number of allotted homerooms, approximately 76%-77% of 39, is 30 classrooms. Multiplying 30 classrooms by 30 equals the ideal enrollment number of 900. Finally the enrollment efficiency range is plus or minus 20 percent of 900, which is 720 - 1080. If a school in this typical elementary school building had an enrollment below 720, it would be considered underutilized. Alternatively, if the school's enrollment was above 1080, it would be overcrowded.

There are 46.5 total classrooms within the Stockton facility; the .5 indicates the presence of one or more small classrooms. Approximately 76%-77% of this number is 35, the number of allotted homerooms. This number multiplied by 30 yields the ideal enrollment of the facility, which is 1050. As such, the enrollment efficiency range of the Stockton facility is between 840-1260 students.

As I stated, the enrollment of Stockton, as of the 20th day of attendance for the 2012-2013 school year, is 475. This number is below the enrollment efficiency range, and thus, the school is underutilized.

The CEO has proposed that the students from Stockton be welcomed by Mary E. Courtenay Elementary Language Arts Center or Courtenay. Courtenay will be relocated from its present location to the current Stockton facility at 4420 North Beacon Street. If this proposal is approved by the Board of Education for the City of Chicago, the resulting space utilization will not exceed the 4420 North Beacon Street facility's enrollment efficiency range as defined by the CPS Space Utilization Standards.

To fully explain the enrollment trend associated with these schools, I would like to direct your attention to the screen. Projected is a slide that shows the enrollment trend of Stockton and Courtenay, green hashed lines showing the enrollment efficiency range of the 4420 North Beacon Street facility, and a circle representing the combined projected enrollment for 2013-2014. Stockton's current enrollment is 475 students and Courtenay's current enrollment is 281 students enrolled for a total of 756 students, below the enrollment efficiency range of the 4420 North Beacon Street facility. Further, the projected enrollment of Stockton for the 2013-2014 school year is 474 and the projected enrollment for Courtenay for next year is 314 for a total combined projected enrollment of 788 students which is also slightly below the enrollment efficiency range. Thus, there is enough space within the 4420 North Beacon Street facility for students from Stockton and students from Courtenay.

If Stockton is closed, the CEO is also proposing that Stockton's attendance area be reassigned to Courtenay, proposed to be located at 4420 North Beacon Street. A map showing the proposed boundary is located in your binder at tab 23 and copies of this map were available tonight at the registration desk. In proposing this boundary, several factors were considered as outlined in the Review and Establishment of School Attendance Boundaries Policy, including, but not limited to, the capacity of the 4420 North Beacon Street facility, geographic barriers, travel time, distance traveled, and program considerations.

After all of the students within the neighborhood are accommodated, available seats will first be offered to siblings of currently enrolled students, with a lottery if there are more sibling

applicants than seats. The remaining seats will be filled through a city-wide lottery. To access these seats, siblings must apply though the options for knowledge process.

You will next hear from my colleague, Craig Benes, who will discuss the performance of Courtenay and highlight the proposed transition efforts.

Thank you, Your Honor. This concludes my statement.

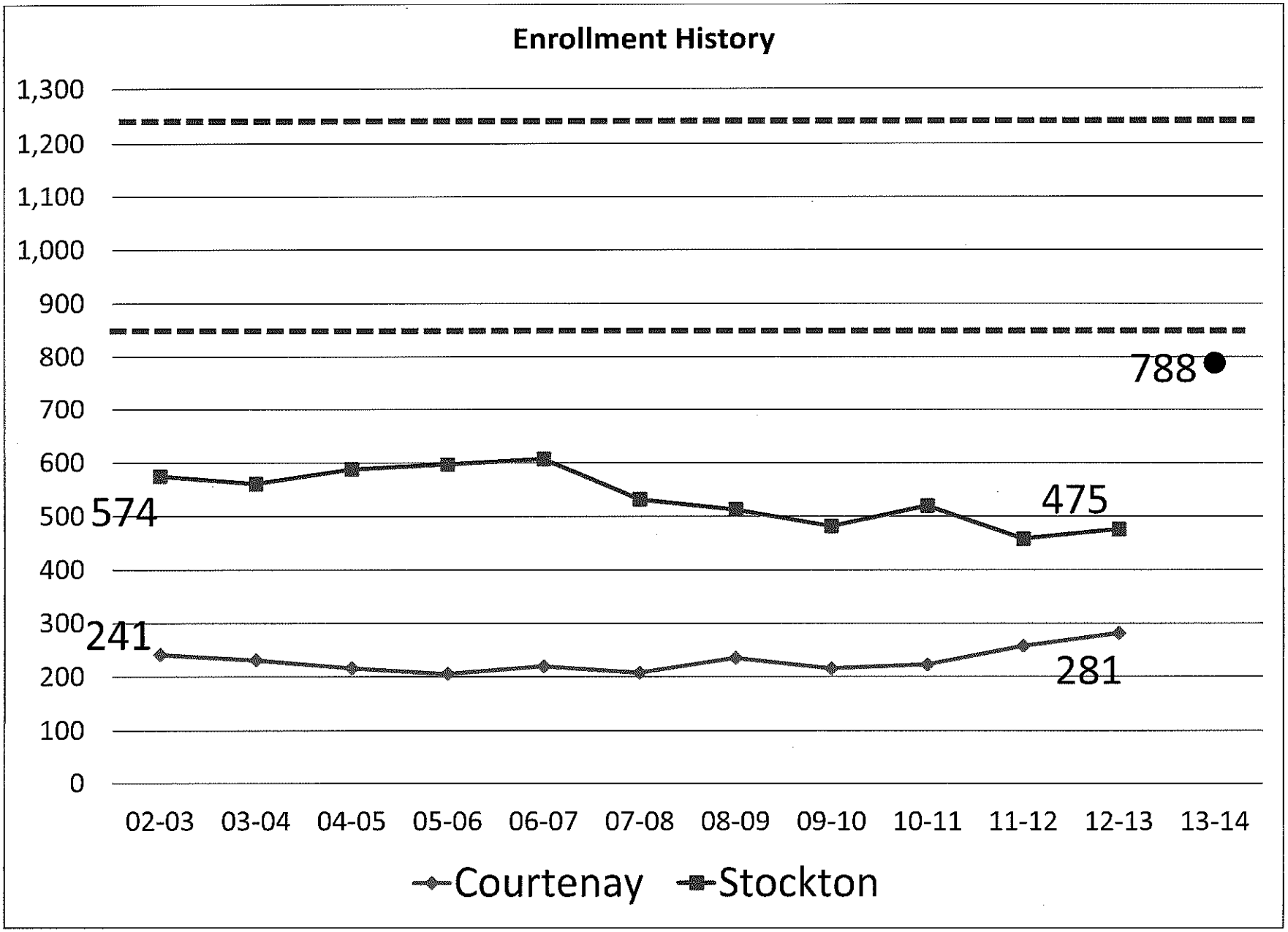
Enrollment History
1,300
1,200
1,100
1,000
900
800
700
600
500
400
300
200
100
0
788
574
475
241
281
02-03
03-04
04-05
05-06
06-07
07-08
08-09
09-10
10-11
11-12
12-13
13-14
Courtenay
Stockton

Current and Proposed Attendance Area Boundaries

CHICAGO PUBLIC SCHOOLS CPS

Current 2012-13 Boundaries

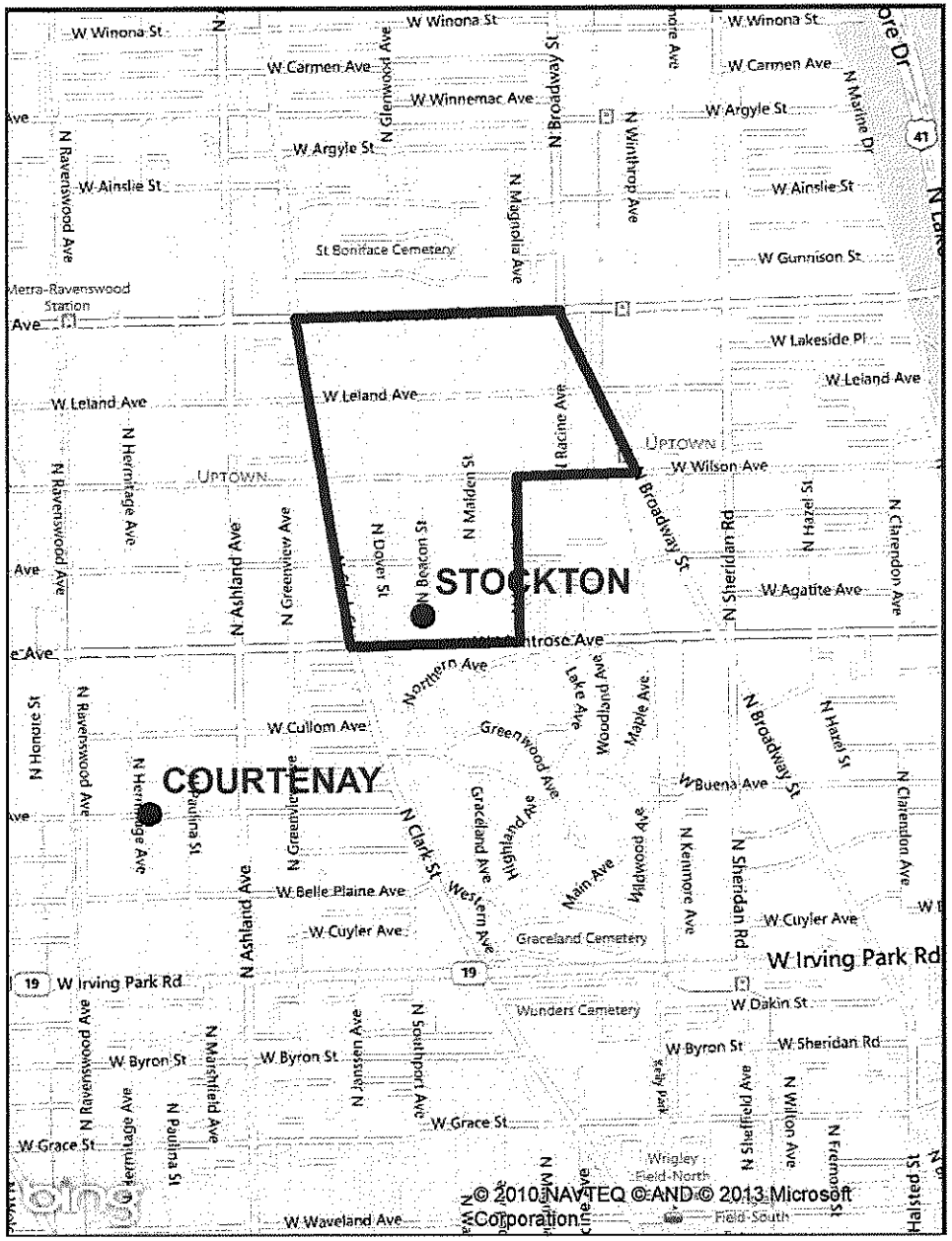

Proposed 2013-14 Boundaries

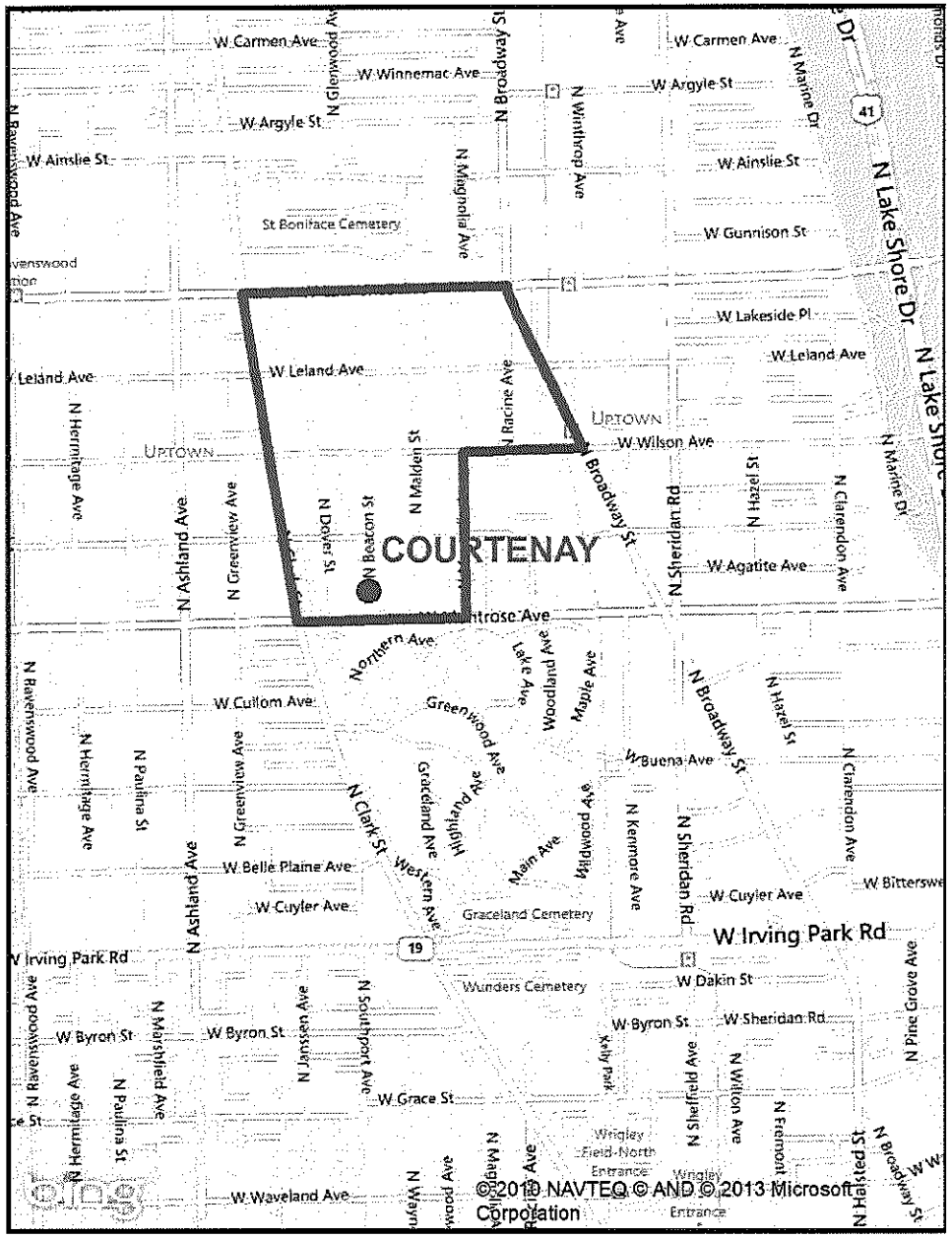

CHICAGO PUBLIC SCHOOLS
Public Hearing to Consider:
Proposed Closure of Joseph Stockton Elementary School and Relocation of Mary E. Courtenay Elementary Language Arts Center
Statement of Craig Benes, Chief of Schools for the Ravenswood-Ridge Elementary Network
April 16, 2013

Good evening Your Honor. My name is Craig Benes. I am the Chief of Schools for the Chicago Public Schools, Ravenswood-Ridge Elementary Network. Chicago Public Schools are divided up into Networks. Network offices are run by a Chief and provide support and oversight for the schools assigned to them on behalf of the CEO. Courtenay is within the Ravenswood-Ridge Elementary Network and I am responsible for the support and oversight of Courtenay on behalf of the CEO. I have been the Chief of Courtenay since fall of 2011.

By way of background, over the past 28 years, I have worked in a number of capacities within public education and social services, including Crisis Team Supervisor, Special Education Teacher, Behavioral Interventionist and Curriculum Writer for the Department of Curriculum and Instruction. I have also served as assistant principal and principal before becoming Chief in the Ravenswood-Ridge Network. I hold a bachelor's degree from the University of Wisconsin-Platteville, a Master of Science degree in Applied Family and Child Studies from Northern Illinois University, a Master of Arts degree in Special Education from Northeastern Illinois University and a Certificate of Advanced Study Type 75 Administration and Supervision from National Louis University-New Leaders for New Schools Principal Training Program.

As you have already heard, Stockton fits the criteria of the Chief Executive Officer's Guidelines for School Actions because it is underutilized based on CPS Space Utilization Standards and student enrollment numbers recorded on the 20th attendance day for the 2012-2013 school year. If this proposal is approved, Stockton students will be welcomed by Courtenay, and Courtenay will relocate to the current Stockton facility, located at 4420 North Beacon Street. The facility at 4420 North Beacon Street has enough space for Stockton and Courtenay students and the resulting combined enrollment will not exceed the facility's enrollment efficiency range.

When Stockton students are welcomed by the Courtenay administration, staff, and students, they will be attending a higher performing school based on the CEO's Guidelines for School Actions. One way that the CEO's Guidelines for School Actions define a higher performing school is if a school received a higher level on the Performance Policy for the 2011-2012 school year. Under the CPS Performance Policy, located in your binder at tab B12, each school receives an annual rating based on its performance on a variety of student outcome measures, including standardized test

scores and student attendance. District-wide, schools designated Level 1 are the highest performing and schools designated Level 3 are the lowest performing. Stockton received a Level 3 rating for the 2011-2012 school year, while Courtenay received a Level 2 rating. The Performance Policy reports reflecting these levels are included in the binder of documents that you have received at tab C25. Please note that the performance policy ratings from the 2011-2012 school year appear under the 2012-2013 header on these reports, as these rating are used to determine each school's accountability status for the 2012-2013 school year.

If this proposal is approved, students will receive additional supports at Stockton during the remainder of this school year and at Courtenay next year, and the Network will provide assistance to ease the transition process as much as possible. CPS has developed a plan dedicating additional resources to address any safety concerns and to fulfill students' academic, social and emotional, and other individual needs. The draft transition plan, explaining these additional resources, was sent home to all families affected by this proposal and is located in your binder at tab A1. CPS will publish final transition plans, if the Board approves this proposal, which will incorporate feedback from community meetings, this hearing, and additional input received.

The CPS Office of Safety and Security, or OSS, has worked with the Chicago Police Department, Department of Family and Support Services, local community groups and faith partners, elected officials, and other sister agencies to develop a plan for the safe transition of students. If this proposal is approved, OSS will take the following steps:

- First, OSS will review and update school safety audits, security personnel allocations, and school safety technology systems to make enhancements as appropriate,
- Second, OSS will be available to address specific safety concerns raised by students and staff.
- Third, OSS will provide Safe Passage supports for students and staff traveling to and from school. Safe Passage workers wear identifiable vests and stand on designated street corners to monitor students' safety during their travel to school in the morning and home in the afternoon. Prior to the start of the 2013-2014 school year, OSS will work with the Courtenay administration and the community to designate specific intersections for safe passage supports.

Additionally, students will receive academic supports as they transition, including the following:

- First, a Principal Transition Coordinator, or PTC, will be assigned to help the principal of Stockton maintain academic rigor for the remainder of the school year and ensure a smooth transition to Courtenay. PTCs are former principals, or other administrators with significant experience, who will be a resource for the administration and ensure continuity of support for faculty and students.

- Second, the Courtenay administration will receive comprehensive, student-specific data on all transitioning students to allow staff to proactively identify individual student needs and prepare to meet those needs.
- Third, I held parent meetings on April 3 with Courtenay and Stockton families. I am open to holding more parent meetings to welcome families and students affected by this action to discuss concerns and educational options.
- Fourth, the principals will receive discretionary resources to provide direct academic support to students. For example, these funds may be used to provide an instructional coach, teacher leader, or to obtain an academic tutoring position or program for students in reading and math. I will support the principals as they consider how to use these resources and approve their selections once decisions are made.

Students will also receive social and emotional supports to help them adjust to a new school environment, including the following:

- First, CPS will help school staff members facilitate intervention groups or peace circles aimed at helping students work through concerns associated with the transition.
- Second, CPS will help staff members implement restorative practices, such as peer circles and peer juries, to encourage peer-to-peer problem solving and resolution.
- Third, groups of students in need of more individualized attention will be provided with access to highly structured interventions.
- Fourth, to foster an environment that is both supportive and inclusive for all students, CPS will provide resources to the Courtenay leadership to implement culture-building activities, such as staff luncheons and team- and trust-building activities. Resources will also be provided to sponsor activities such as school visits for families, coffee chats with the principal, picnics, field trips, or parent meetings to help transitioning families get to know their new school.

Finally, additional transition supports will be provided to ensure that Stockton students who have unique needs or circumstances are adequately supported in this transition, including students with diverse learning needs, students in temporary living situations, English language learners, and early childhood participants. For example, the Snoezelen room (pronounced "SNOOZE-a-lin") at the 4420 North Beacon Street facility will continue to provide a specialized selection of sensory equipment and materials to assist students with sensory stimulation and to advance education and therapy goals. Other additional supports are described in more detail in the draft transition plan, located in your binder at tab A1.

In conclusion, Stockton is underutilized, the combined enrollment of Stockton and Courtenay students at the 4420 North Beacon Street facility will not exceed the facility's enrollment efficiency range, and Courtenay is a higher performing school. The CEO

believes that this proposed school closure will help the District better serve all students and is prepared to assist students with additional supports as they transition.

Thank you for your time and attention. This concludes my statement.

Performance Policy

CHICAGO PUBLIC SCHOOLS | CPS

2012 Elementary School Performance Policy Report

Joseph Stockton Elementary School

School ID: 610189

Network: Ravenswood-Ridge Elementary Network

Current Status and Trend	2009	2010	2011	2012	Current Status	Trend	Points
ISAT Reading Meets/Exceeds %	77.2%	73.9%	76.9%	74.1%	74.1% (2 points)	-4.5 (0 points)	2 of 6
ISAT Math Meets/Exceeds %	87.7%	84.0%	84.1%	80.7%	82.3% (3 points)	-5.0 (0 points)	3 of 6
ISAT Science Meets/Exceeds %	80.5%	85.8%	74.6%	67.4%	68.4% (1 point)	-18.2 (0 points)	1 of 6
ISAT Composite Exceeds %	12.9%	15.0%	13.8%	10.3%	12.1% (1 point)	-3.9 (0 points)	1 of 6
8th Grade ISAT Composite Exceeds %	8.5%	16.3%	17.6%	8.0%	12.8% (1 point)	-6.1 (0 points)	1 of 6
Adjusted Attendance Rate	95.6%	94.9%	95.0%	95.1%	95.1% (3 points)	+0.1 (3 points)	6 of 6

Student Growth Metrics	2012 Score	Percentile	Points
Value-Added Reading	-0.5	29th	1 of 3
Value-Added Math	-0.2	40th	1 of 3

Overall Rating

Performance Policy Rating	**2012-2013**	2011-2012	2010-2011
Performance Policy Points Earned	16 of 42 (38.1%)	21 of 42 (50%)	20 of 42 (47.6%)
Performance Rating	Level 3	Level 2	Level 3
ISAT Composite Meets/Exceeds %	72.6% (2012)	80.4% (2011)	76.6% (2010)
Probation Status	Probation	Not on Probation	Probation

growth of similar students District-wide. This comparison is made using a regression methodology that controls for each prior ISAT performance, and student demographics.

Adjusted Attendance	For the Performance Policy, attendance is adjusted for students with medically fragile conditions and early graduation fo 12th grade students. This adjustment is only made if it results in a positive adjustment. This does not replace the school rate and may not match the attendance rate reported elsewhere.
Minimum Performance Standard	Elementary schools with an ISAT Composite score below 50% or high schools with a PSAE score below 10% are autom probation, regardless of Level achieved.

Scoring

	If Current Status score is:	School receives:	If Trend score is:	School receives:
ISAT Reading Meets/Exceeds % (Ceiling = 90%)	Less than 50%	0 points	Less than 0.1	0 points
	50.0% to 69.9%	1 point	0.1 to 2.9	1 point
	70.0% to 79.9%	2 points	3.0 to 5.9	2 points
	80.0% or more	3 points	6.0 or more	3 points
ISAT Math Meets/Exceeds % (Ceiling = 90%)	Less than 50.0%	0 points	Less than 0.1	0 points
	50.0% to 69.9%	1 point	0.1 to 2.9	1 point
	70.0% to 79.9%	2 points	3.0 to 5.9	2 points
	80.0% or more	3 points	6.0 or more	3 points
ISAT Science Meets/Exceeds % (Ceiling = 90%)	Less than 50.0%	0 points	Less than 0.1	0 points
	50.0% to 69.9%	1 point	0.1 to 2.9	1 point
	70.0% to 79.9%	2 points	3.0 to 5.9	2 points
	80.0% or more	3 points	6.0 or more	3 points
ISAT Composite Exceeds % (Ceiling = 90%)	Less than 5.0%	0 points	Less than 0.1	0 points
	5.0% to 14.9%	1 point	0.1 to 2.9	1 point
	15.0% to 24.9%	2 points	3.0 to 5.9	2 points
	25.0% or more	3 points	6.0 or more	3 points
Highest Grade ISAT Composite Exceeds % (Ceiling = 90%)	Less than 5.0%	0 points	Less than 0.1	0 points
	5.0% to 14.9%	1 point	0.1 to 2.9	1 point
	15.0% to 24.9%	2 points	3.0 to 5.9	2 points
	25.0% or more	3 points	6.0 or more	3 points
Attendance Rate (Ceiling = 95%)	Less than 90.0%	0 points	Less than 0.1	0 points
	90.0% to 92.9%	1 point	0.1 to 0.4	1 point
	93.0% to 94.9%	2 points	0.5 to 0.9	2 points
	95.0% or more	3 points	1.0 or more	3 points

	If Value-Added score is:	School receives:
Value-Added Reading	Less than -1.0	0 points
	-1.0 to -0.1	1 point
	0.0 to 0.9	2 points
	1.0 or more	3 points
Value-Added Mathematics	Less than -1.0	0 points
	-1.0 to -0.1	1 point
	0.0 to 0.9	2 points
	1.0 or more	3 points

Ratings and Statu

If percent of points is:
71% or more
50% to 70.9%
Less than 50%

*Notes on Probation:
Schools that have been on prol more consecutive years must a 2 rating for 2 consecutive years probation.

Schools where the Board has ta Section 8.3 of the Illinois Schoo to be removed from probation such action was taken or th consecutive years, whichever

Charter schools do not receive charter school accountability is agreement with the Board.

For More Informa

For more information on the please visit www.cps.edu/p

Performance Policy

CHICAGO PUBLIC SCHOOLS | CPS

2012 Elementary School Performance Policy Report

Mary E Courtenay Elementary Language Arts Center

School ID: 610355

Network: Ravenswood-Ridge Elementary Network

Current Status and Trend	2009	2010	2011	2012	Current Status	Trend	Points
ISAT Reading Meets/Exceeds %	[illegible]	[illegible]	[illegible]	[illegible]	86.6% (3 points)	-2.6 (0 points)	3 of 6
ISAT Math Meets/Exceeds %	[illegible]	[illegible]	[illegible]	[illegible]	91.7% (3 points)	-5.4 (3 points)	6 of 6
ISAT Science Meets/Exceeds %	[illegible]	[illegible]	[illegible]	[illegible]	91.5% (3 points)	+1.5 (3 points)	6 of 6
ISAT Composite Exceeds %	[illegible]	[illegible]	[illegible]	[illegible]	23.9% (2 points)	-2.7 (0 points)	2 of 6
8th Grade ISAT Composite Exceeds %	[illegible]	[illegible]	[illegible]	0.0%	8.4% (1 point)	-23.1 (0 points)	1 of 6
Adjusted Attendance Rate	[illegible]	[illegible]	[illegible]	[illegible]	95.4% (3 points)	+0.7 (3 points)	6 of 6

Student Growth Metrics	2012 Score	Percentile	Points
Value-Added Reading	+1.0	86th	3 of 3
Value-Added Math	-1.8	3rd	0 of 3

Overall Rating

Performance Policy Rating	**2012-2013**	2011-2012	2010-2011
Performance Policy Points Earned	27 of 42 (64.3%)	26 of 42 (61.9%)	37 of 42 (88.1%)
Performance Rating	Level 2	Level 2	Level 1
ISAT Composite Meets/Exceeds %	88.4% (2012)	90.3% (2011)	94.4% (2010)
Probation Status	Not on Probation	Not on Probation	Not on Probation

growth of similar students District-wide. This comparison is made using a regression methodology that controls for each prior ISAT performance, and student demographics.

Adjusted Attendance	For the Performance Policy, attendance is adjusted for students with medically fragile conditions and early graduation fo 12th grade students. This adjustment is only made if it results in a positive adjustment. This does not replace the school rate and may not match the attendance rate reported elsewhere.
Minimum Performance Standard	Elementary schools with an ISAT Composite score below 50% or high schools with a PSAE score below 10% are automa.. probation, regardless of Level achieved.

Scoring

	If Current Status score is:	School receives:	If Trend score is:	School receives:
ISAT Reading Meets/Exceeds % (Ceiling = 90%)	Less than 50%	0 points	Less than 0.1	0 points
	50.0% to 69.9%	1 point	0.1 to 2.9	1 point
	70.0% to 79.9%	2 points	3.0 to 5.9	2 points
	80.0% or more	3 points	6.0 or more	3 points
ISAT Math Meets/Exceeds % (Ceiling = 90%)	Less than 50.0%	0 points	Less than 0.1	0 points
	50.0% to 69.9%	1 point	0.1 to 2.9	1 point
	70.0% to 79.9%	2 points	3.0 to 5.9	2 points
	80.0% or more	3 points	6.0 or more	3 points
ISAT Science Meets/Exceeds % (Ceiling = 90%)	Less than 50.0%	0 points	Less than 0.1	0 points
	50.0% to 69.9%	1 point	0.1 to 2.9	1 point
	70.0% to 79.9%	2 points	3.0 to 5.9	2 points
	80.0% or more	3 points	6.0 or more	3 points
ISAT Composite Exceeds % (Ceiling = 90%)	Less than 5.0%	0 points	Less than 0.1	0 points
	5.0% to 14.9%	1 point	0.1 to 2.9	1 point
	15.0% to 24.9%	2 points	3.0 to 5.9	2 points
	25.0% or more	3 points	6.0 or more	3 points
Highest Grade ISAT Composite Exceeds % (Ceiling = 90%)	Less than 5.0%	0 points	Less than 0.1	0 points
	5.0% to 14.9%	1 point	0.1 to 2.9	1 point
	15.0% to 24.9%	2 points	3.0 to 5.9	2 points
	25.0% or more	3 points	6.0 or more	3 points
Attendance Rate (Ceiling = 95%)	Less than 90.0%	0 points	Less than 0.1	0 points
	90.0% to 92.9%	1 point	0.1 to 0.4	1 point
	93.0% to 94.9%	2 points	0.5 to 0.9	2 points
	95.0% or more	3 points	1.0 or more	3 points

	If Value-Added score is:	School receives:
Value-Added Reading	Less than -1.0	0 points
	-1.0 to -0.1	1 point
	0.0 to 0.9	2 points
	1.0 or more	3 points
Value-Added Mathematics	Less than -1.0	0 points
	-1.0 to -0.1	1 point
	0.0 to 0.9	2 points
	1.0 or more	3 points

Ratings and Statu

If percent of points is:
71% or more
50% to 70.9%
Less than 50%

*Notes on Probation:
Schools that have been on prol more consecutive years must a 2 rating for 2 consecutive years probation.

Schools where the Board has ta Section 8.3 of the Illinois Schoo to be removed from probation such action was taken or th consecutive years, whichever u

Charter schools do not receive charter school accountability is agreement with the Board.

For More Informa

For more information on the please visit www.cps.edu/p